Compensated Neutron
Gamma Ray

THE WIRELINE GROUP

Company	Occidental Petroleum Corp.
Well	Camenisch 33-2HZ
Field	Wattenberg
County	Weld
State	Colorado Country USA

Company Occidental Petroleum Corp.
Well Camenisch 33-2HZ
Field Wattenberg
County Weld
State Colorado Country USA

Location: API # : 0512351901
SHL: 2388' FSL & 2132' FEL NWSE
Lat/Long: 40.268723 / -104.893691
SEC 33 TWP 4N RGE 67W

Other Services
RCBL
Gauge-Ring

Permanent Datum	GL	Elevation	4870'
Log Measured From	KB 26' above GL		
Drilling Measured From	KB		

Elevation
K.B. 4896'
D.F. N/A
G.L. 4870'

Date	16 August 2024
Run Number	One
Depth Driller	17373'
Depth Logger	7700'
Bottom Logged Interval	7698'
Top Log Interval	Surface
Open Hole Size	7.875"
Type Fluid	Fresh water
Density / Viscosity	8.3#
Max. Recorded Temp.	223* F
Estimated Cement Top	N/A
Time Well Ready	ROA
Time Logger on Bottom	13:30
Equipment Number	8048
Location	Windsor, CO
Recorded By	Schuman
Witnessed By	Mr Ryan Schock

Borehole Record			Tubing Record		
Run Number	Bit	From	To	Size	Weight	From	To

Casing Record	Size	Wgt/Ft	Top	Bottom
Surface String	9.625"	36ppf L-80 8Rd	Surface	1885'
Prot. String				
Production String	5.5"	17ppf P110 ICY LTC	Surface	17359'
Liner				

<<< Fold Here >>>

All interpretations are opinions based on inferences from electrical or other measurements and we cannot and do not guarantee the accuracy or correctness of any interpretation, and we shall not, except in the case of gross or willful negligence on our part, be liable or responsible for any loss, costs, damages, or expenses incurred or sustained by anyone resulting from any interpretation made by any of our officers, agents or employees. These interpretations are also subject to our general terms and conditions set out in our current Price Schedule.

Comments

Correlated to casing tally marker joint at 7022'
Log ran under 2800 PSI surface-induced pressure.
Thank you for choosing The Wireline Group!!!

THE WIRELINE GROUP

Main Pass 2"=100'

Database File	0512351901_camenisch 33-2hz_oxy.db
Dataset Pathname	cnlcbl/pass4
Presentation Format	cnl-oxy
Dataset Creation	Fri Aug 16 18:19:55 2024
Charted by	Depth in Feet scaled 1:600

THE WIRELINE GROUP

Main Pass 5"=100'

Database File	0512351901_camenisch 33-2hz_oxy.db
Dataset Pathname	cnlcbl/pass4
Presentation Format	cnl-oxy
Dataset Creation	Fri Aug 16 18:19:55 2024
Charted by	Depth in Feet scaled 1:240

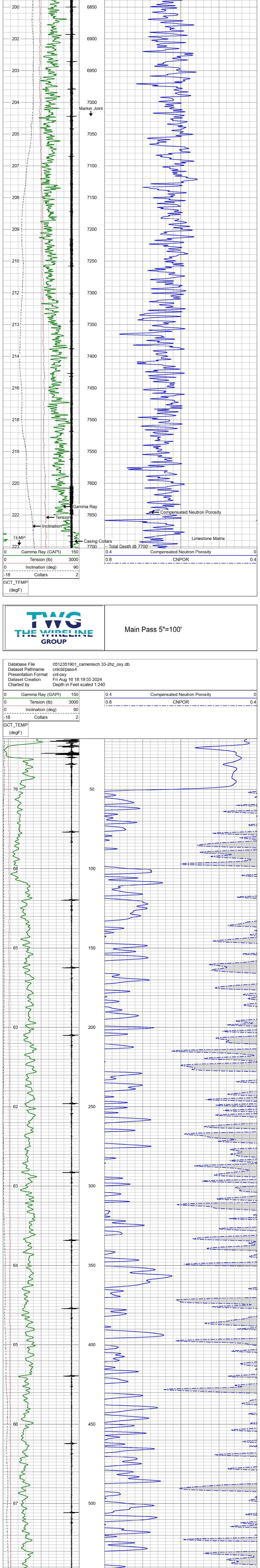

550
600
650
700
750
800
850
900
950
1000
1050
1100
1150
1200
1250
1300
1350
1400
1450
1500
1550
1600
1650
1700
1750
1800
1850
1900
1950
2000
2050
2100
2150
2200
2250
2300
2350
2400
2450
2500
2550
2600
2650
2700
2750
2800
2850
2900
2950
3000
3050
3100
3150
3200
3250
3300
3350
3400
3450
3500
3550
3600
3650
3700
3750
3800
3850
3900
3950
4000
4050
4100
4150
4200
4250
4300
4350
4400
4450
4500

THE WIRELINE GROUP

Repeat Section 5"=100'

Database File 0512351901_camenisch 33-2hz_oxy.db
Dataset Pathname cnlcbl/pass1.1
Presentation Format cnl-oxy
Dataset Creation Fri Aug 16 18:20:52 2024
Charted by Depth in Feet scaled 1:240

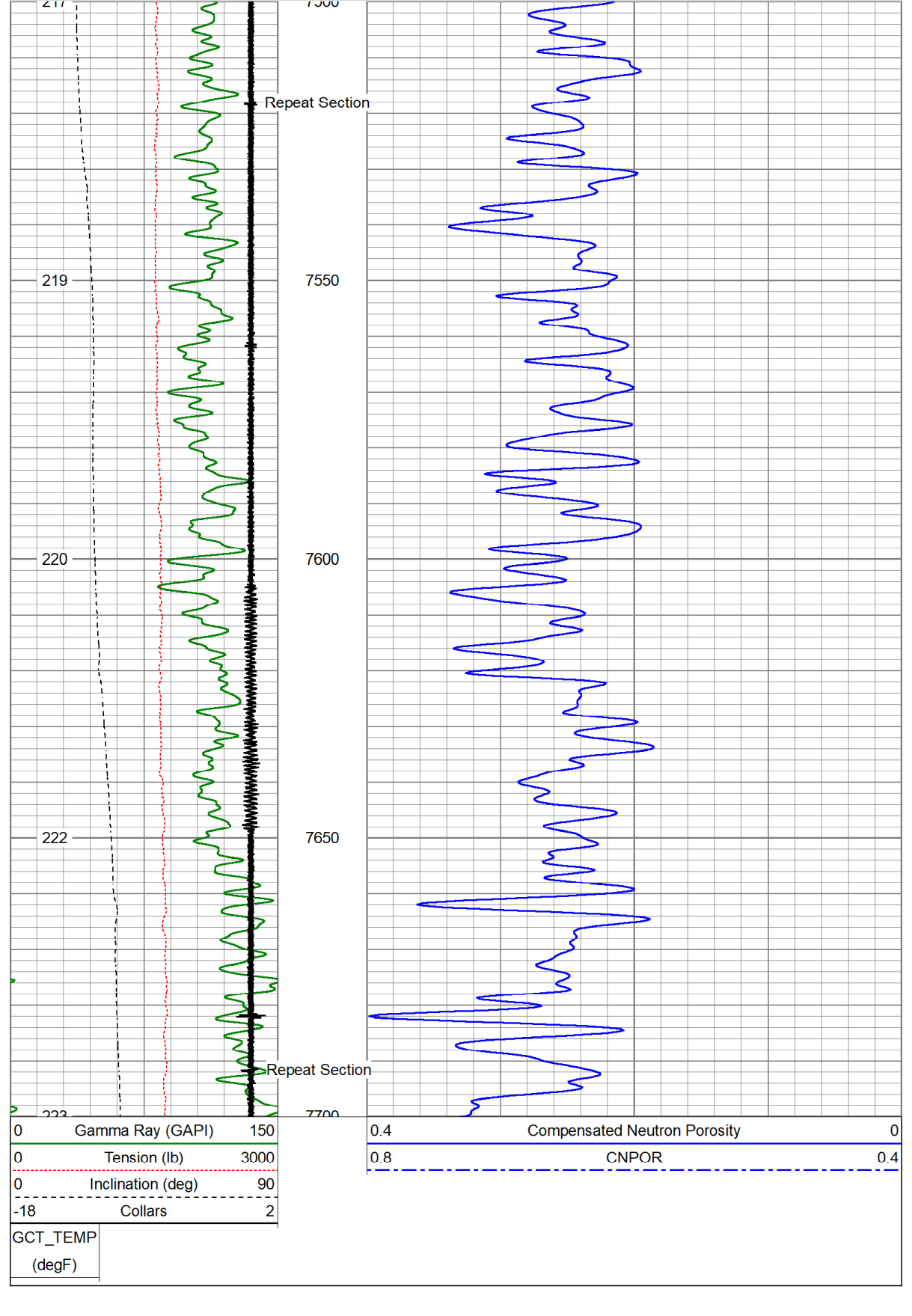

Log Variables

DatabaseC:\ProgramData\Warrior\Data\0512351901_camenisch 33-2hz_oxy.db
Dataset field/well/cnlcbl/pass1/_vars_

Top - Bottom

BOREID in	BOTTEMP degF	CASED?	CASEOD in	CASETHCK in	CASEWGHT lb/ft	CMNTTHCK in	CMTTKCOR
7.875	100	Yes	5.5	0.304	17	1.1875	On
CSTKCOR	**MAXAMPL** mV	**MINAMPL** mV	**MINATTN** db/ft	**NPORSEL**	**PERFS**	**PPT** usec	**SRFTEMP** degF
On	0	1	0.08	Limestone	No	0	0
SZCOR	**TDEPTH** ft						
On	0						

Variable Description

BOREID : Borehole I.D.
BOTTEMP : Bottom Hole Temperature
CASED? : Cased hole ?
CASEOD : Casing O.D.
CASETHCK : Casing Thickness
CASEWGHT : Casing Weight
CMNTTHCK : Cement Thickness
CMTTKCOR : CN CemThk. Cor. ?
CSTKCOR : CN CasThk. Cor. ?

MAXAMPL : Maximum Amplitude
MINAMPL : Minimum Amplitude
MINATTN : Minimum Attenuation
NPORSEL : Neutron Porosity Curve Select
PERFS : Perforation Flag
PPT : Predicted Pipe Time
SRFTEMP : Surface Temperature
SZCOR : CN Size Cor. ?
TDEPTH : Total Depth

Calibration Report

Database File 0512351901_camenisch 33-2hz_oxy.db
Dataset Pathname cnlcbl/pass1
Dataset Creation Fri Aug 16 13:34:17 2024

Compensated Neutron Calibration Report

Model: CNT - 275Dig
Serial Number: FW1409-35

SHOP CALIBRATION Thu May 30 11:32:41 2024

	Cal Tube	Units
Tank Ratio	11.6940	SS/LS
LS Detector	68.71	cps
SS Detector	748.49	cps
Tool Ratio	10.8929	SS/LS
Tool Gain	1.0735	----

Gamma Ray Calibration Report

Serial Number: 1804-091
Tool Model: GCT_275_0001
Performed: Fri Aug 9 13:24:17 2024

Calibrator Value: 1.0 GAPI

Background Reading: 0.0 cps
Calibrator Reading: 1.0 cps

Sensitivity: 0.8500 GAPI/cps

Segmented Cement Bond Log Calibration Report

Serial Number: 1906032_5.5
Tool Model: Probe275acc

Calibration Casing Diameter: 5.500 in
Calibration Depth: 1158.362 ft

Master Calibration, performed Wed Jul 17 12:58:56 2024:

	Raw (v)		Calibrated (mv)		Results	
	Zero	Cal	Zero	Cal	Gain	Offset
3'	0.005	0.908	1.000	71.921	51.253	0.658
CAL	0.004	0.990				
5'	0.008	0.916	1.000	71.921	77.238	0.319
SUM						
S1	0.008	0.922	0.000	100.000	83.367	-0.018
S2	0.007	0.868	0.000	100.000	86.075	-0.008
S3	0.007	0.848	0.000	100.000	88.099	-0.008
S4	0.007	0.869	0.000	100.000	86.055	-0.008
S5	0.008	0.935	0.000	100.000	78.564	-0.004
S6	0.013	0.964	0.000	100.000	75.502	-0.002
S7	0.008	0.945	0.000	100.000	78.707	-0.000
S8	0.009	0.958	0.000	100.000	77.434	-0.003

Sensor	Offset (ft)	Schematic	Description	Length (ft)	O.D. (in)	Weight (lb
GCT_FMWR	20.36	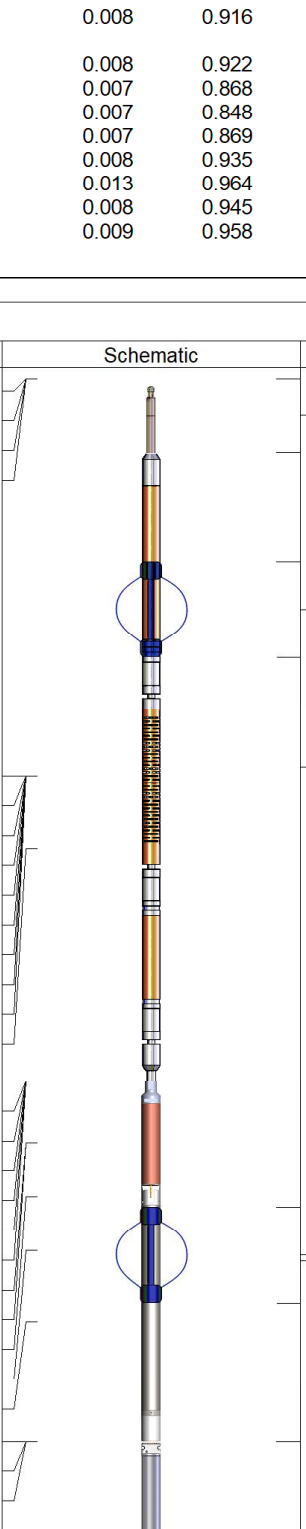	Cable Head-Titan_144 1 7/16" Titan Cable Head	1.03	1.44	2.00
mSec_Count	20.36					
RBT_Status	20.36					
Error_Ct	20.36					
			SO BS CENT-2750-4500 Slip Over 2-3/4" I.D. for 4-1/2" O.D. Casing Bow Spring Centralizer	1.33	4.80	10.00
WVFS8	14.83		RBT8acc-Probe275acc (1906032_5.5) 2.75" Radial Corrosion with accelerometer	8.75	2.75	110.00
WVFS7	14.83					
WVFS6	14.83					
WVFS5	14.83					
WVFS4	14.83					
WVFS3	14.83					
WVFS2	14.83					
WVFS1	14.83					
WVF3FT	14.83					
WVF5FT	13.83					
RBT_HV	10.58					
RBT_ACCZ	10.58					
RBT_ACCY	10.58					
RBT_ACCX	10.58					
GCT_HV	10.58					
WVFSYNC	10.58					
WVFCAL	10.58		SO BS CENT-2750-4500 Slip Over 2-3/4" I.D. for 4-1/2" O.D. Casing Bow Spring Centralizer	1.33	4.80	10.00
CCL$2	9.73					
CCL$1	9.73		GCT_acc-GCT_275_0001 (1804-091) Probe 2.75" 6 Pin Gamma Ray - CCL w/ Temp	5.01	2.75	55.00
GCT_Temp	8.98					
GR	8.23					
GCT_IntTemp	7.24					
GCT_ACCZ	5.57					
GCT_ACCY	5.57					
GCT_ACCX	5.57					

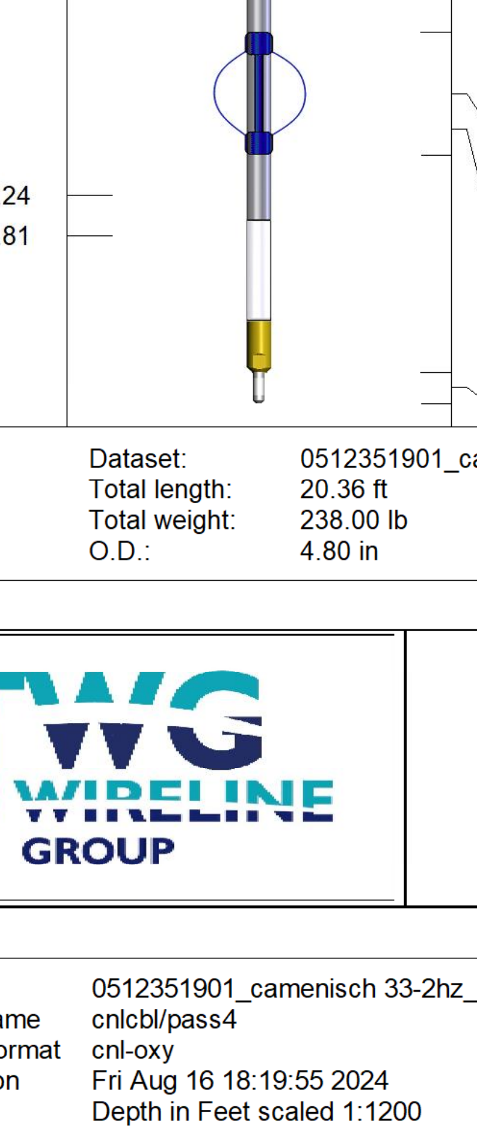

CNLSC 2.24
CNSSC 1.81

SO BS CENT-2750-4500 Slip Over 2-3/4" I.D. for 4-1/2" O.D. Casing Bow Spring Centralizer	1.33	4.80	10.00
CNT-275Dig (FW1409-35) Probe Digital CNL	5.24	2.75	40.00
Plug-FA108-0000 1.38" Bull Plug	0.33	1.38	1.00

Dataset:	0512351901_camenisch 33-2hz_oxy.db: field/well/cnlcbl/pass1
Total length:	20.36 ft
Total weight:	238.00 lb
O.D.:	4.80 in

TWG THE WIRELINE GROUP

Main Pass 1"=100'

Database File	0512351901_camenisch 33-2hz_oxy.db
Dataset Pathname	cnlcbl/pass4
Presentation Format	cnl-oxy
Dataset Creation	Fri Aug 16 18:19:55 2024
Charted by	Depth in Feet scaled 1:1200

TWG THE WIRELINE GROUP

Company	Occidental Petroleum Corp.
Well	Camenisch 33-2HZ
Field	Wattenberg
County	Weld
State	Colorado
Country	USA