Plugged and Abandoned Configuration 29-Feb-16
Fritzler Resources, Inc.

Apollo State #1-36

| | | | |
|---|---|---|---|
| KB Elevation | | 6 | ft |
| Ground Elevation | | 4729 | ft |
| Surface Casing | 114 ft | 8 5/8 | 23 # |
| | 130 sxs | | |
| Cmt at surface | | | |
| Production Casing | | 5 1/2 | 14# |
| TD | 5394 | | |
| PBTD | 5346 | | |

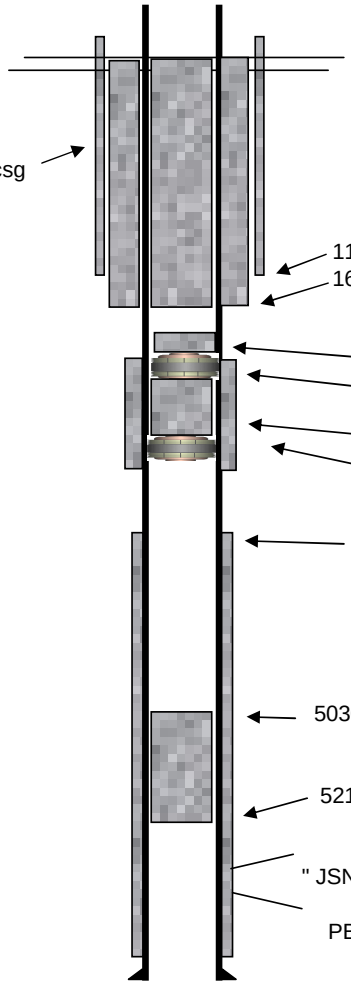

12 1/4 hole

114 ft. 8 5/8 24# surface csg

114 ft 130 sks
164 ft perforated Pumped 75 sks cmt
2/29/2016 had returns to surface 14.5 #

left 5 sx cmt on top of retainer 2/29/2016
900 ft. Set Cmt Retainer
Pumped 40 sxs 14.5 #
1000 ft. Perforated

1020 ft . Set CIBP

Cement Tops at 4470 ft(Bond Log)
150 sks

5030 ft Tagged Top of cmt plug
2/26/2016

5210 ft set bottom of Cmt Plug 25 sks --- 14 # cmt
2/26/2016

" JSND " 5294-5296 3 spf

PBTD 5346
TD 5394