HALLIBURTON

CEMENT BOND LOG
GR-CCL

Company	URSA OPERATING COMPANY
Well	Monument Ridge B 44A-08-07-95
Field	Parachute
County	Garfield State CO

Company URSA OPERATING COMPANY
Well Monument Ridge B 44A-08-07-95
Field Parachute
County Garfield State CO

API No.: 05-045-22961-0000 Serv #: 903139763
Location: SHL: 935' FSL & 166' FEL
Other Services JB/RMTi
Sec:8 Twp:7S Rge: 95 W

Permanent Datum	Ground Level	Elevation 5701.8'	Elevation
Log Measured From	KB , 17 Ft. above perm. datum		KB. 5718.8'
Drilling Measured From	KB		D.F. 5718.8' G.L. 5701.8'

Date @ Time Logged	24-FEB-2016	Type Fluid in Hole	Water
Run No.	One	Density of Fluid	8.4 PPG
Depth - Driller	7096'	Fluid Level	Full
Depth - Logger	6860'	Cement Top Est. Logged	n/a
Bottom - Logged Interval	6850'	Equipment / Location	RS / 10971690
Top - Log Interval	1700'	Recorded by	Pedro Gonzalez Baqueiro
Max. Recorded Temp.	n/a	Witnessed by	Luke Greiger

CEMENTING DATA	Surface String	Protection String	Production String	Liner
Date / Time Cemented				
Primary / Squeeze				
Expected Compressive Strength	psi@ hrs	psi@ hrs	psi@ hrs	psi@ hrs
Cement Volume				
Cement Type / Weight	/	/	/	/
Formulation				
Mud Type / Mud Wgt.	/	/	/	/

Run Number	Borehole Record Bit	From	To	Casing & Tubing Record Size	Weight	From	To
One	24	surface	60'	16"	75#	surface	60'
Two	12.25"	surface	1700'	8.625"	32#	surface	1700'
Three	7.875"	surface	7054.8'	4.5"	11.6#	surface	7054.8'

<<< Fold Here >>>

HALLIBURTON DOES NOT GUARANTEE THE ACCURACY OF ANY INTERPRETATION OF THE LOG DATA, CONVERSION OF LOG DATA TO PHYSICAL ROCK PARAMETERS OR RECOMMENDATIONS WHICH MAY BE GIVEN BY HALLIBURTON PERSONNEL OR WHICH APPEAR ON THE LOG OR IN ANY OTHER FORM. ANY USER OF SUCH DATA, INTERPRETATIONS, CONVERSIONS, OR RECOMMENDATIONS AGREES THAT HALLIBURTON IS NOT RESPONSIBLE EXCEPT WHERE DUE TO GROSS NEGLIGENCE OR WILLFUL MISCONDUCT, FOR ANY LOSS, DAMAGES, OR EXPENSES RESULTING FROM THE USE THEREOF.

Comments

HES Cement Bond Log First Run in to the hole
Log correlated by KB 17'
Log Interval Percustomer Request
Log Ran in combo with RMTi tool

THANK YOU FOR CHOOSING HALLIBURTON ENERGY ROCKSPRING WY

HALLIBURTON

MAIN PASS

5"=100'

Database File	monument ridge 44a-08-07-95.db
Dataset Pathname	main
Presentation Format	cbl_main
Dataset Creation	Wed Feb 24 14:28:21 2016
Charted by	Depth in Feet scaled 1:240

400 TRAVEL TIME (usec) 200 -6500 CCL 650 0 Gamma Ray (GAPI) 150	LTEN 0 (lb 2200	0 AMP AMPLITUDE (mV) 10 0 AMPLITUDE (mV) 100

200 MSG 1060

HALLIBURTON

MAIN PASS

5"=100'

REPEAT PASS

5"=100'

HALLIBURTON

Database File monument ridge 44a-08-07-95.db
Dataset Pathname repeat
Presentation Format cbl_main
Dataset Creation Wed Feb 24 13:56:26 2016
Charted by Depth in Feet scaled 1:240

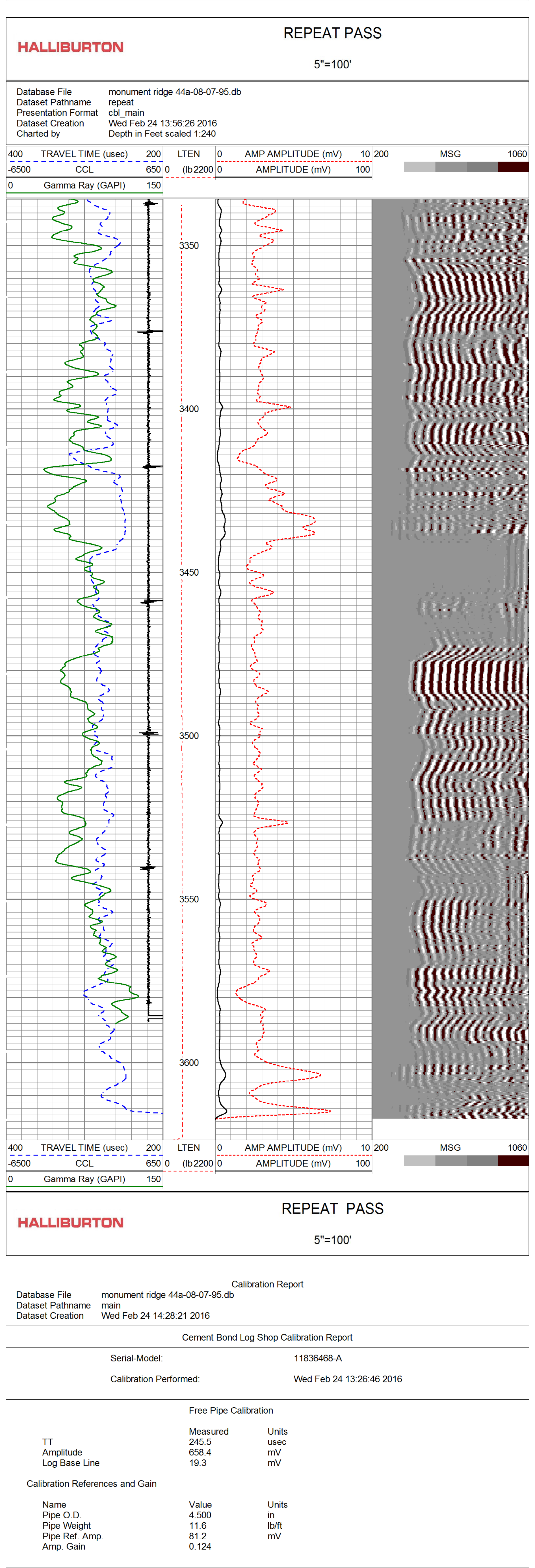

HALLIBURTON

REPEAT PASS

5"=100'

Calibration Report

Database File monument ridge 44a-08-07-95.db
Dataset Pathname main
Dataset Creation Wed Feb 24 14:28:21 2016

Cement Bond Log Shop Calibration Report

Serial-Model: 11836468-A
Calibration Performed: Wed Feb 24 13:26:46 2016

Free Pipe Calibration

	Measured	Units
TT	245.5	usec
Amplitude	658.4	mV
Log Base Line	19.3	mV

Calibration References and Gain

Name	Value	Units
Pipe O.D.	4.500	in
Pipe Weight	11.6	lb/ft
Pipe Ref. Amp.	81.2	mV
Amp. Gain	0.124	

Reservoir Monitor Tool I Calibration Report

Serial-Model: 12270693-A
Shop Calibration Performed: Fri Feb 12 14:31:42 2016

Carbon/Oxygen Mode

Stabilization

Result	Logged	Expected Value	Diff.	Tol.	Units
GENV	93.00	80.00	13.00	+/-15.00	V
ITCR2	3235	3250	-15	+/-250	cps

Near Detector

	Channel	Expected Value	Amplitude	FWHM	Tol.
H	60	60 +/-2	0.0267	5.38	<6.00
Fe	206	206 +/-2	0.0959	-----	-----

NGAIN = 0.997 NZOFF = 0.2

Far Detector

	Channel	Expected Value	Amplitude	FWHM	Tol.
H	60	60 +/-2	0.0342	6.01	<6.50
Fe	209	208 +/-2	0.0911	-----	-----

FGAIN = 0.991 FZOFF = 0.6

Flask Temperature 55.3 degF

Result	Logged	Expected Value	Diff.	Tol.	Units
COIR2	0.45	0.45	-0.00	+/-0.02	
LIRI2	1.36	1.36	0.00	+/-0.05	
TCCR2	5189	5000	189	+/-1000	cps
ITCR2	3213	3200	13	+/-250	cps

Sigma Mode

Stabilization

Result	Logged	Expected Value	Diff.	Tol.	Units
GENV	93.00	80.00	13.00	+/-15.00	V
FCAP	9709	10000	-291	+/-500	cps

Horizontal Water Tank

Result	Logged	Expected Value	Diff.	Tol.	Units
N/F Normalizer	1.00	0.95	0.05		
N/F Inel Norm	0.65	0.61	0.04		
RNF	1.00	1.07	-0.07	+/-0.12	
RINC	1.54	1.64	-0.10	+/-0.18	
SGFN	24.10	24.00	0.10	+/-0.50	cu
SGFF	22.94	22.85	0.09	+/-0.50	cu
FSIN	23109	24000	-891	+/-2000	cps
FCAP	9760	10000	-240	+/-1000	cps
NFTR	0.80			<5.00	
FFTR	0.87			<5.00	
NBKG	180			<500	cps
FBKG	96			<500	cps
RTN	0.39	0.40	-0.01	+/-0.10	usec
RTF	0.41	0.40	0.01	+/-0.10	usec

Calibration Software Modules

HRMTI Module 2015.5.4.0
RMTI Module 2015.5.15.1

Log Data Acquisition Software Modules

HRMTI Module 2015.5.4.0
RMTI Module 2015.5.15.1

Gamma Ray Calibration Report

Type / Serial: 002 / 11527445

SHOP CALIBRATION Fri Feb 12 13:43:57 2016

	Counts/Sec.	Gain	Offset	Jig	Units
Background	24.6				cps
Calibrator	314.1				cps
		1.4958			GAPI/cps

PRIMARY VERIFICATION

Background	36.1				cps
Calibrator	466.2				cps
Difference				430.1	GAPI

BEFORE SURVEY VERIFICATION

Background	0.0				cps
Calibrator	0.0				cps
Difference				0.0	GAPI

AFTER SURVEY VERIFICATION

Background	0.0				cps
Calibrator	0.0				cps
Difference				0.0	GAPI

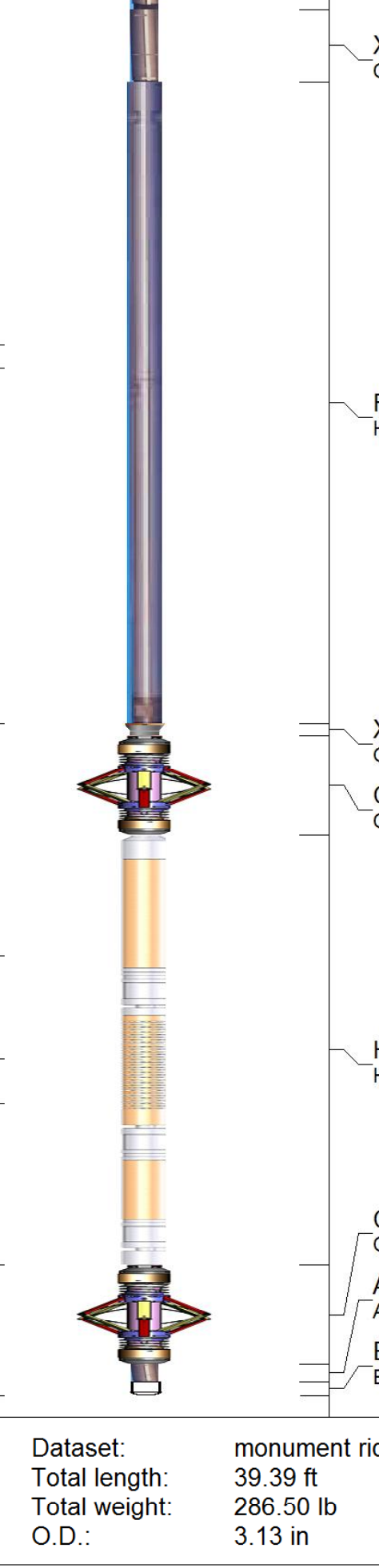

Sensor	Offset (ft)	Schematic	Description	Length (ft)	O.D. (in)	Weight (lb)
			STNDCH-STND_CH 1.4375 IN CABLE HEAD	1.50	1.44	1.00
CCL	35.82					
GR	33.56					
			TTTCU-002 (11527445) Through Tubing Telemetry Cartridge - Ultrawire	7.65	1.69	30.00
			XHU-003 (11983708) Crossover Halliburton 1553 to Ultrawire	1.58	1.69	7.00
RmtTFGT	22.91					
RmtTNGT	22.41		RMTI-A (12270693) Halliburton RMTI Tool	14.00	2.13	77.00
RmtFP5V	14.66		X-OVER-GoxSondex Gox Box x Sondex Pin CrossOver	0.27	1.69	1.00
RmtNFwvMcsP	14.66		CENT-CASTM-CENT CAST M INLINE CENTRALIZER	2.16	3.13	25.00
RmtCommFWa	14.66					
Temp	9.57					
			HCBLM-A (11836468) Halliburton HCBLM Tool	9.38	2.75	116.00
TT3FT	7.32					
AMP3FT	7.32					
WVF5FT	6.36					
			CENT-CASTM-CENT CAST M INLINE CENTRALIZER	2.16	3.13	25.00
WVF3FT	2.84		AUH-001 (11072111) Adaptor Ultrawire/Halliburton	0.38	1.69	3.00
			BUL-001 (000001) Bullnose	0.30	1.69	1.50
LLMTEN	0.00					

Dataset: monument ridge 44a-08-07-95.db: field/well/run1/main
Total length: 39.39 ft
Total weight: 286.50 lb
O.D.: 3.13 in

Company	URSA OPERATING COMPANY
Well	Monument Ridge B 44A-08-07-95
Field	Parachute
County	Garfield
State	CO

HALLIBURTON

CEMENT BOND LOG
GR-CCL