COMPENSATED DENSITY
COMPENSATED NEUTRON
GAMMA RAY

PIONEER
Pioneer Energy Services

Company Central Operating & Winslow Resources
Well #1 William Miller
Field Wildcat
County Washington
State Colorado

Company Central Operating & Winslow Resources
Well #1 William Miller
Field Wildcat
County Washington State Colorado
Location: API # : 05-121-11043-00
600' FSL & 1100' FWL SW SW
SEC 7 TWP 2N RGE 51W

Other Services
DIL

Permanent Datum GL Elevation 4512
Log Measured From KB
Drilling Measured From KB

Elevation
K.B. 4524
D.F. 4523
G.L. 4512

Date	September 08, 2014		
Run Number	1		
Depth Driller	4571		
Depth Logger	4565		
Bottom Logged Interval	4545		
Top Log Interval	Casing 8 5/8		
Casing Driller	203		
Casing Logger	203		
Bit Size	7 7/8		
Type Fluid in Hole	Mud		
Density / Viscosity	9.4/69		
pH / Fluid Loss	8.0		
Source of Sample	Flowline		
Rm @ Meas. Temp	3.8 @ 80		
Rmf @ Meas. Temp	na		
Rmc @ Meas. Temp	na		
Source of Rmf / Rmc	Calc / Calc		
Rm @ BHT	1.9 @ 160 F		
Time Circulation Stopped	2000 9/7/2014		
Time Logger on Bottom	02:00		
Maximum Recorded Temperature	160		
Equipment Number	36		
Location	Ft. Morgan, CO		
Recorded By	Tracy Crane		
Witnessed By	Dave Winslow		

<<< Fold Here >>>

All interpretations are opinions based on inferences from electrical or other measurements and Pioneer Wireline Services, LLC cannot and does not guarantee the accuracy or correctness of any interpretation, and Pioneer Wireline Services, LLC will not be liable or responsible for any loss, costs, damages, or expenses incurred or sustained by anyone resulting from any interpretation made by any of our officers, agents or employees.

Comments

Annular volume calculated for 5.5" casing
Excell #3
Thank you for using Pioneer Energy Services!

Sensor	Offset (ft)	Schematic	Description	Len (ft)	OD (in)	Wt (lb)
		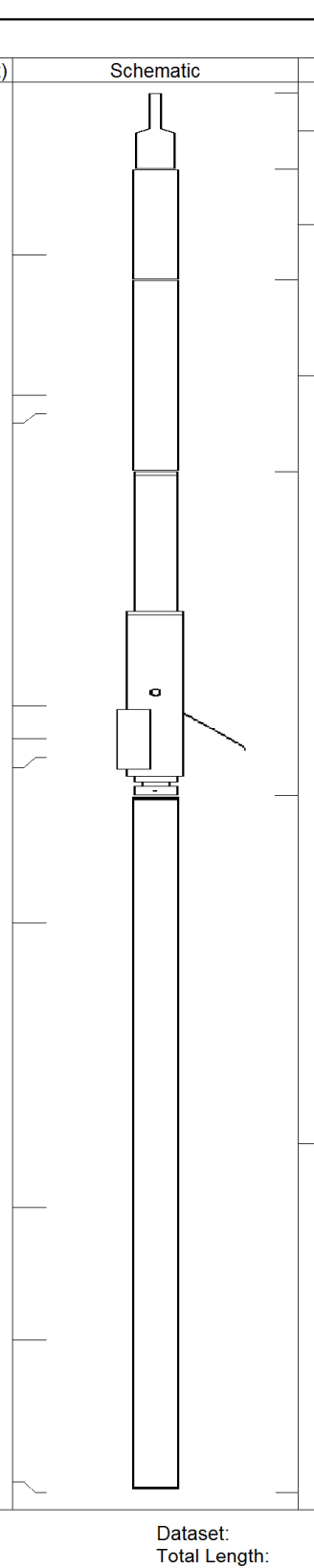	CHD (~0)	2.00	3.50	30.00
			GR-PSI (197)	2.92	3.50	40.00
GR	0.00					
			CNT-PSI (853)	5.00	3.50	70.00
CNLSC	-3.67					
CNSSC	-4.17					
			CDL-PSI (979)	8.50	5.00	285.00
DCAL	-11.84					
LSD	-12.67					
SSD	-13.17					
RLL3	-17.52					
			DIL-PSI (1010)	18.25	3.75	175.00
CILD	-24.97					
CILM	-28.42					
SP	-32.42					

Dataset: 123706.db: field/well/run1/pass2
Total Length: 36.67 ft
Total Weight: 600.00 lb
O.D. 5.00 in

Database File:	123706.db
Dataset Pathname:	pass3
Presentation Format:	den_neui
Dataset Creation:	Mon Sep 08 02:46:35 2014 by Log Open-Cased 110302
Charted by:	Depth in Feet scaled 1:240

Database File: 123706.db
Dataset Pathname: pass2
Presentation Format: den_neui
Dataset Creation: Mon Sep 08 02:31:37 2014 by Log Open-Cased 110302
Charted by: Depth in Feet scaled 1:240

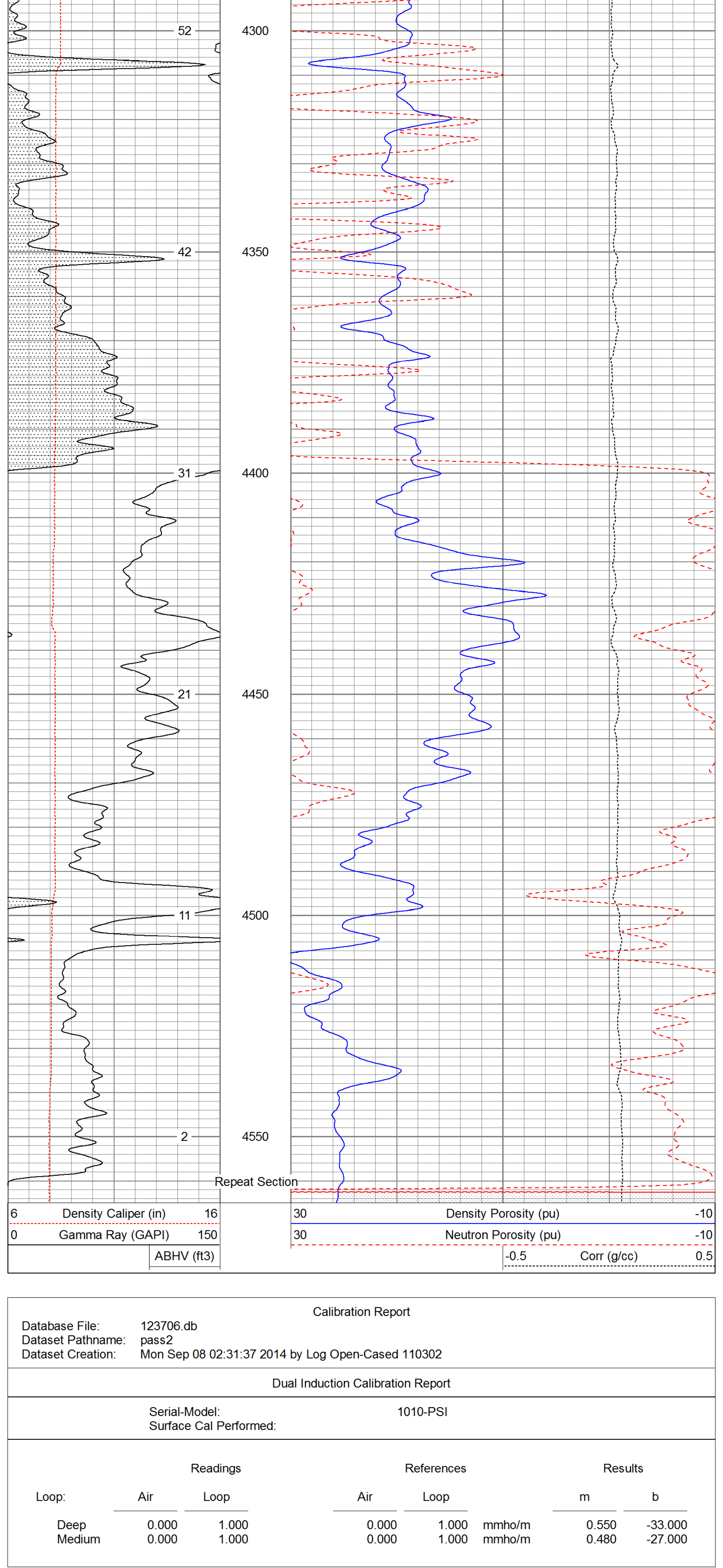

Calibration Report

Database File: 123706.db
Dataset Pathname: pass2
Dataset Creation: Mon Sep 08 02:31:37 2014 by Log Open-Cased 110302

Dual Induction Calibration Report

Serial-Model: 1010-PSI
Surface Cal Performed:

	Readings		References			Results	
Loop:	Air	Loop	Air	Loop		m	b
Deep	0.000	1.000	0.000	1.000	mmho/m	0.550	-33.000
Medium	0.000	1.000	0.000	1.000	mmho/m	0.480	-27.000

Compensated Density Calibration Report

Serial-Model: 979-PSI
Master Calibration Performed: Wed Aug 20 14:34:48 2014

Master Calibration

	Density		Far Detector	Near Detector	
Magnesium	1.750	g/cc	11187.10	15127.80	cps
Aluminum	2.690	g/cc	2023.73	9655.31	cps

	Size		Reading
Small Ring		in	
Medium Ring		in	
Large Ring		in	

Compensated Neutron Calibration Report

Serial Number: 853
Tool Model: PSI

CALIBRATION

Detector	Readings		Target		Normalization
Short Space	1.00	cps	1.00	cps	1.9000
Long Space	1.00	cps	1.00	cps	1.9200

Gamma Ray Calibration Report

Serial Number: 197
Tool Model: PSI
Performed: Tue Oct 18 17:42:20 2011

Calibrator Value: 275.0 GAPI

Background Reading: 32.0 cps
Calibrator Reading: 340.0 cps

Sensitivity: 0.6000 GAPI/cps

Log Variables

Database:C:\Warrior\Data\123706.db
Dataset: field/well/run1/pass2

Top - Bottom

SZCOR	NPORSEL	FLUIDDEN g/cc	MATRXDEN g/cc	SPSHIFT mV	SNDERRM mmho/m	SNDERR mmho/m	CASEOD in
On	Sandstone	1	2.65	0	0	0	5.5

PERFS	TDEPTH ft	BOTTEMP degF	BOREID in
0	0	160	7.875