From: Juan Carlos Carratu
To: Diana Burn - DNR; Dirk Sutphin - DNR; Larry Coler - DNR
Cc: Ola Akrad; Onur Conger; Kaulin Waldner
Subject: RE: Austin Exploration-Pathfinder C-18#1-Lost hole Skid Rig-Report 043-06225
Date: Tuesday, May 6, 2014 11:22:36 AM
Attachments: image002.png

I made some changes to the report.

Thanks!

Description of fish in the hole (if any) – including top and bottom measured depths

Top of fish=~ 709'

Bottom of Fish=710'

Type of cement to be used for all plugs, including slurry weight (ppg) and yield (cf/sk)

14-15 ppg
1.5 cf/sk

Description of proposed plugs: setting measured depths, heights, and cement volumes

Rubber plug at approximately 350-400 ft. (protect Coal streaks)
Cement from top of rubber plug to surface (approximately 27 barrels=154 cf.)

Juan Carlos Carratú
VP- Colorado Unit
Austin Exploration LTD
320 East 3rd st., Florence, CO 81226
Office: 7197847616
Mobile: 3036180841
jcarratu@austinexploration.com

From: Diana Burn - DNR [mailto:diana.burn@state.co.us]
Sent: Tuesday, May 06, 2014 10:26 AM
To: Juan Carlos Carratu; Dirk Sutphin - DNR; Larry Coler - DNR
Cc: Ola Akrad; Onur Conger; Kaulin Waldner
Subject: RE: Austin Exploration-Pathfinder C-18#1-Lost hole Skid Rig-Report 043-06225

Please proceed as proposed. Please get the APD and its supporting documentation in by close of business today.

Thanks,
Diana

From: Juan Carlos Carratu [mailto:jcarratu@austinexploration.com]
Sent: Tuesday, May 06, 2014 10:24 AM
To: Diana Burn - DNR; Dirk Sutphin - DNR; Larry Coler - DNR
Cc: Ola Akrad; Onur Conger; Kaulin Waldner
Subject: RE: Austin Exploration-Pathfinder C-18#1-Lost hole Skid Rig-Report 043-06225

Good morning Diana,

Below the answers for an Lost hole Skid Rig approval.

Best!

Explanation of the situation that has resulted in a lost hole and the need to plug the lost hole

The surface hole was been drilled with not delays or signs of problems with an 8.75” hammer bit. By the time we reached 710’ the bit showed signs of no progress. It was decided to pull out of the hole and when surface was reached, part of the bit was broken off leaving a fish of approximately 6.5” (below pic of broken part that was retrieved).

Several fish runs were made in order to retrieve it. 2 runs were made with a taper tap in the intent of stabbing into the middle bit hole. No success.

After that 2 milling runs were made with a washing shoe in the intent of milling the fish and potentially swallowing it through the hollow section of the shoe. No success.

Due to economic reasons, it is the intent of plugging the existing hole and skidding the rig 10 ft away from the original hole. The hole will have the same objectives as the permitting well.

Total Measured depth reached in the lost hole

Total measured depth 710’

Casing Set – size(s) and measured depth (s)

Only a conductor casing was set.

- 9-5/8”, 36#/ft set at 60’.

Description of fish in the hole (if any) – including top and bottom measured depths

Figure 3 Retrieved Shank piece of broken hammer bit

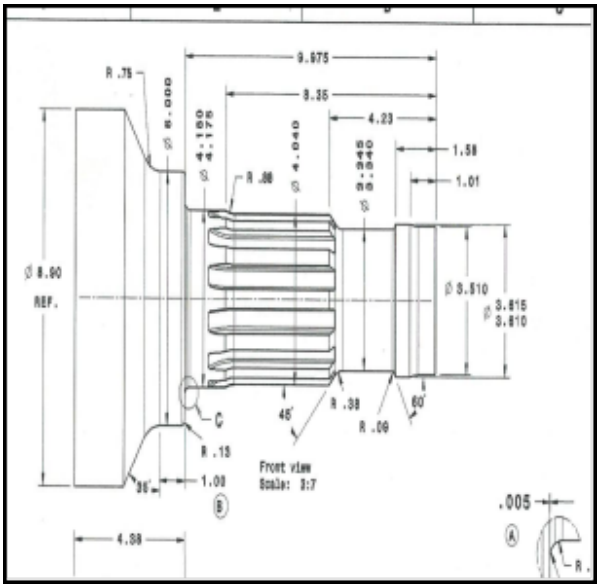

Figure 4 Bit drawing

- Top of fish=~ 704'
- Bottom of Fish=~710'

Description of proposed plugs: setting measured depths, heights, and cement volumes

Rubber plug at approximately 200-250 ft.
Cement from top of rubber plug to surface (approximately 20 barrels=110 cf.)

Type of cement to be used for all plugs, including slurry weight (ppg) and yield (cf/sk)

14-15 ppg
5.5 cf/sk

Proposed objective formation (s) for replacement well – new or same as lost hole

Same as lost hole

BHL target for replacement well – new or same as lost hole

Same as lost hole

Juan Carlos Carratú
VP- Colorado Unit
Austin Exploration LTD
320 East 3rd st., Florence, CO 81226
Office: 7197847616
Mobile: 3036180841
jcarratu@austinexploration.com

From: Diana Burn - DNR [mailto:diana.burn@state.co.us]
Sent: Tuesday, May 06, 2014 10:04 AM
To: Juan Carlos Carratu; Dirk Sutphin - DNR; Larry Coler - DNR
Cc: Ola Akrad; Onur Conger; Kaulin Waldner
Subject: RE: Austin Exploration-Pathfinder C-18#1-Lost hole Skid Rig-Report 043-06225

Thanks for the info – I recognize that it is picky – but could you please put just the answers to the Skid questions in an e-mail for the 'approval' confirmation? The email is an attachment to the new permit and so the details should be in the email itself.

I would suggest that the new well does have some indicator as to it is not the same exact well. Too often, when the name(number) is not changed, then things get filed on the wrong API and it can be tough to unwind. It can be as simple as an 'X' or an 'R' in the well number.

Thanks – good luck,
Diana

From: Juan Carlos Carratu [mailto:jcarratu@austinexploration.com]
Sent: Tuesday, May 06, 2014 9:52 AM

To: Diana Burn - DNR; dirk.sutphin@state.co.us; Larry Coler - DNR (larry.coler@state.co.us)
Cc: Ola Akrad; Onur Conger; Kaulin Waldner (kaulin.waldner@dewpointwest.com); Juan Carlos Carratu
Subject: Austin Exploration-Pathfinder C-18#1-Lost hole Skid Rig-Report

Good morning, Diana, Dirk and Larry,

As discussed last Saturday, we had the fear that we would be needing to skid the rig due to a fish at our surface hole phase.

Attached is a report I made following the "Lost Hole Rig Skid: Approval and Reporting Process" send by you all.

Please let me know if everything looks ok, or if more information is required.

I am planning on skidding the rig today afternoon and the well plug will not occur until I have the formal approval.

Best Regards

Juan Carlos

Juan Carlos Carratú
VP- Colorado Unit
Austin Exploration LTD
320 East 3rd st., Florence, CO 81226
Office: 7197847616
Mobile: 3036180841
jcarratu@austinexploration.com