FORM 4 Rev 12/05

State of Col
Oil and Gas Conservatio
1120 Lincoln Street, Suite 801, Denver, Colorado 8020

02542230

DE | ET | OE | ES

RECEIVED
MAR 29 2012
COGCC

SUNDRY NOTICE

Submit original plus one copy. This form is to be used for general, technical and environmental sundry information. For proposed or completed operations, describe in full on Technical Information Page (Page 2 of this form.) Identify well or other facility by API Number or by OGCC Facility ID. Operator shall send an informational copy of all sundry notices for wells located in High Density Areas to the Local Government Designee (Rule 603b.)

1. OGCC Operator Number: 96850
2. Name of Operator: Williams Production RMT Company LLC
3. Address: 1001 17th Street, Suite 1200
City: Denver State: CO Zip: 80202
4. Contact Name: Howard Harris
Phone: (303) 606-4086
Fax: (303) 629-8268

5. API Number ~~05-103-10988-00~~ OGCC Facility ID Number 335612
6. Well/Facility Name: Federal 7. Well/Facility Number RGU 13-36-198
8. Location (QtrQtr, Sec, Twp, Rng, Meridian): NWSW SEC. 36 T1S-R98W 6TH PM
9. County: Rio Blanco 10. Field Name: Sulphur Creek
11. Federal, Indian or State Lease Number: COC60735

Complete the Attachment Checklist

	OP	OGCC
Survey Plat		
Directional Survey		
Surface Eqpmt Diagram		
Technical Info Page	X	
Other	X	

General Notice

☐ **CHANGE OF LOCATION:** **Attach New Survey Plat** (a change of surface qtr/qtr is substantive and requires a new permit)

		FNL/FSL		FEL/FWL
Change of **Surface** Footage **from** Exterior Section Lines:				
Change of **Surface** Footage **to** Exterior Section Lines:				
Change of **Bottomhole** Footage **from** Exterior Section Lines:				
Change of **Bottomhole** Footage **to** Exterior Section Lines:				

attach directional survey

Bottomhole location Qtr/Qtr, Sec, Twp, Rng, Mer

Latitude Distance to nearest property line Distance to nearest bldg, public rd, utility or RR
Longitude Distance to nearest lease line Is location in a High Density Area (rule 603b)? Yes/No
Ground Elevation Distance to nearest well same formation Surface owner consultation date:

GPS DATA:
Date of Measurement PDOP Reading Instrument Operator's Name

☐ **CHANGE SPACING UNIT**

Formation	Formation Code	Spacing order number	Unit Acreage	Unit configuration

☐ **Remove from surface bond**
Signed surface use agreement attached

☐ **CHANGE OF OPERATOR (prior to drilling):**
Effective Date:
Plugging Bond: ☐ Blanket ☐ Individual

☐ **CHANGE WELL NAME** **NUMBER**
From:
To:
Effective Date:

☐ **ABANDONED LOCATION:**
Was location ever built? ☐ Yes ☐ No
Is site ready for Inspection? ☐ Yes ☐ No
Date Ready for Inspection:

☐ **NOTICE OF CONTINUED SHUT IN STATUS**
Date well shut in or temporarily abandoned:
Has Production Equipment been removed from site? ☐ Yes ☐ No
MIT required if shut in longer than two years. Date of last MIT

☐ **SPUD DATE:**

☐ **REQUEST FOR CONFIDENTIAL STATUS** (6 mos from date casing set)

☐ **SUBSEQUENT REPORT OF STAGE, SQUEEZE OR REMEDIAL CEMENT WORK** *submit cbl and cement job summaries

Method used	Cementing tool setting/perf depth	Cement volume	Cement top	Cement bottom	Date

☐ **RECLAMATION:** Attach technical page describing final reclamation procedures per Rule 1004.
Final reclamation will commence on approximately ☐ Final reclamation is completed and site is ready for inspection.

Technical Engineering/Environmental Notice

☒ Notice of Intent
Approximate Start Date: 4/1/12

☐ Report of Work Done
Date Work Completed:

Details of work must be described in full on Technical Information Page (Page 2 must be submitted.)

☐ Intent to Recomplete (submit form 2)
☐ Change Drilling Plans
☐ Gross Interval Changed?
☐ Casing/Cementing Program Change
☐ Request to Vent or Flare
☐ Repair Well
☐ Rule 502 variance requested
☒ Other: Set Large Frac Tank
☐ E&P Waste Disposal
☐ Beneficial Reuse of E&P Waste
☐ Status Update/Change of Remediation Plans for Spills and Releases

I hereby certify that the statements made in this form are, to the best of my knowledge, true, correct and complete.

Signed: Howard Harris Date: 3/27/12 Email: Howard.Harris@Williams.com
Print Name: Howard Harris Title: Sr. Regulatory Specialist

COGCC Approved: Thomas J. Kerr Title Acting Director Date: 7/9/12
CONDITIONS OF APPROVAL, IF ANY:

PLEASE SEE ATTACHED CONDITIONS OF APPROVAL

FORM 4 Rev 12/05

TECHNICAL INFORMATION PAGE

FOR OGCC USE ONLY

RECEIVED MAR 29 2012 COGCC

1. OGCC Operator Number: 96850 API Number: 335612 ~~05-103-10908-00~~
2. Name of Operator: Williams Production RMT Company LLC OGCC Facility ID #
3. Well/Facility Name: Federal Well/Facility Number: RGU 13-36-198
4. Location (QtrQtr, Sec, Twp, Rng, Meridian): NWSW 36-T1S-R98W

This form is to be completed whenever a Sundry Notice is submitted requiring detailed report of work to be performed or completed. This form shall be transmitted within 30 days of work completed as a "subsequent" report and must accompany Form 4, page 1.

5. **DESCRIBE PROPOSED OR COMPLETED OPERATIONS**

Federal RGU 13-36-198 Pad:

WPX Energy requests a variance in the 75' safety setback between tanks and wellheads on the RGU 13-36-198 well pad as required by COGCC Rule 604 a.(8). WPX Energy has received authorization from the BLM to construct and operate a large water tank on the subject pad for the purpose of collecting, storing and staging completions water. Per the request of the BLM that tank be placed on existing disturbance, and due to the operational need to place the tank on cut material, the tank is located approximately 45' from the nearest wellhead. Please see attached well pad design and approved sundry notice from the BLM authorizing construction and operation of this tank.

A Delineated Perimeter Berm has been constructed around the edge of the pad (as shown in attachment) to provide secondary containment for the water tank. In order to protect the wellheads in the unlikely event of a release, limited secondary containment will also be provided by an additional berm which has been constructed between the water tank and the wellheads. For additional safety, the subject tank was constructed with a leak detection system, which will be utilized as long as the tank is in operation (see attached for additional detail).

Because the majority of the subject well pad is needed for secondary containment, and is therefore essential to the operation of the water tank, interim reclamation will not occur within 12 months of the last completions event as required by COGCC Rule 1003 b. Once subsequent operations cease and the water tank is removed from the pad, interim reclamation will proceed as required by the Rule.

SEE ALSO SUPPLEMENTAL INFORMATION PROVIDED 6/28/12.

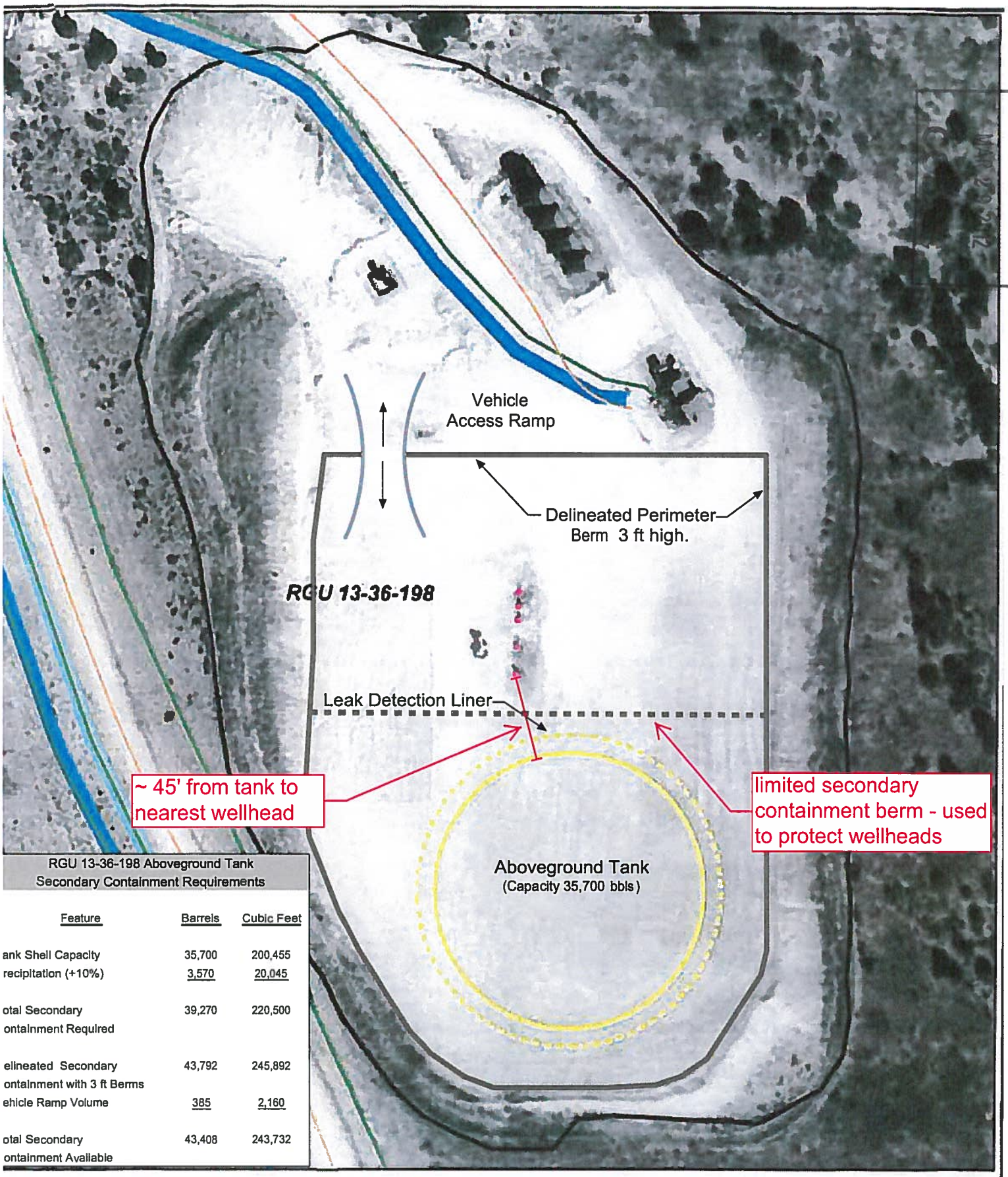

RECEIVED

RGU 13-36-198 Aboveground Tank Secondary Containment Requirements

Feature	Barrels	Cubic Feet
ank Shell Capacity	35,700	200,455
recipitation (+10%)	3,570	20,045
otal Secondary ontainment Required	39,270	220,500
elineated Secondary ontainment with 3 ft Berms	43,792	245,892
ehicle Ramp Volume	385	2,160
otal Secondary ontainment Available	43,408	243,732

Legend

- Producing Well
- Tank (150' Diameter)
- Tank Buffer (10')
- Road
- Gas Line
- Single 4 in Water Line
- Dual 4 in Water Line
- Pad Disturbance

N
W E
S

0 35 70 140 Feet

Williams.

Williams Production RMT Company LLC

Aboveground Tank Leak Detection Details

RECEIVED
MAR 29 2012
COGCC

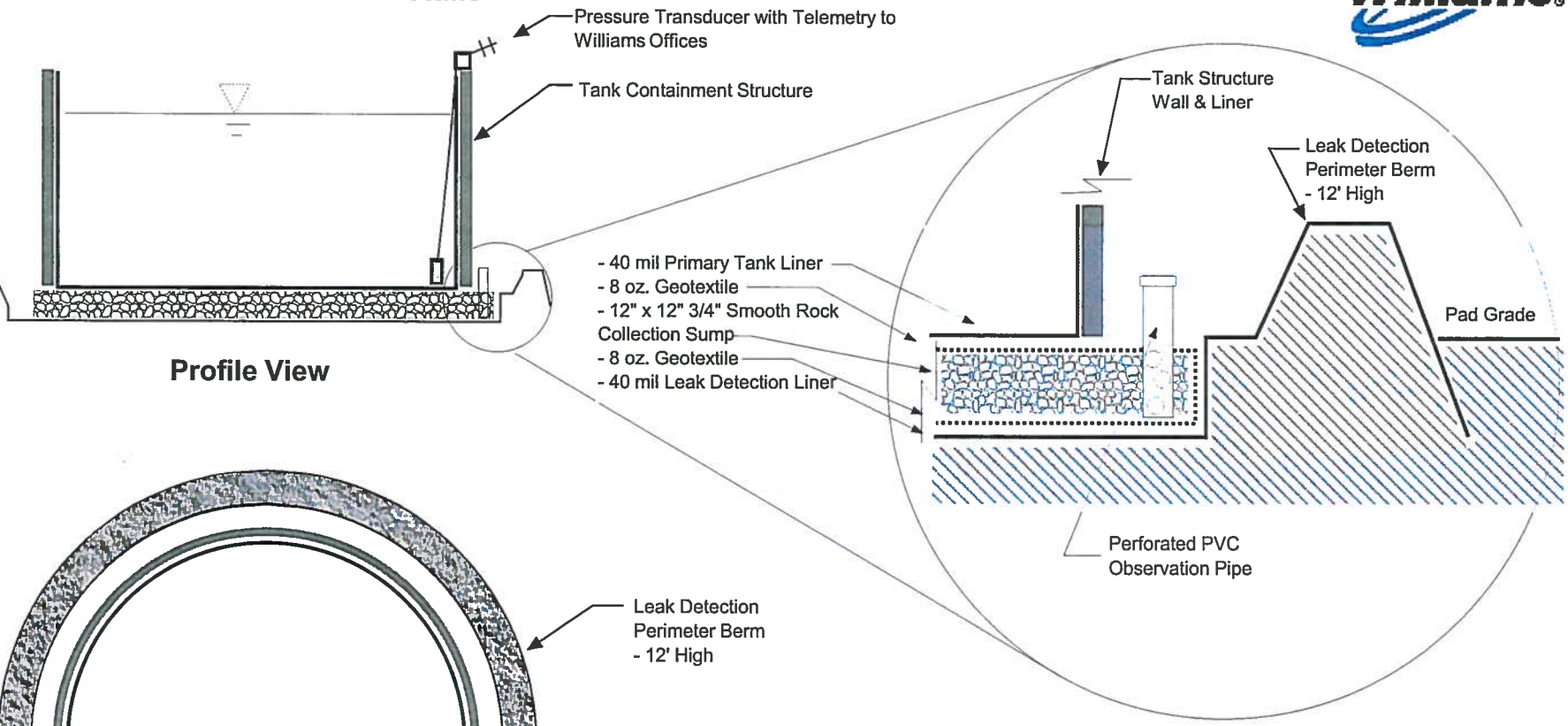

Profile View

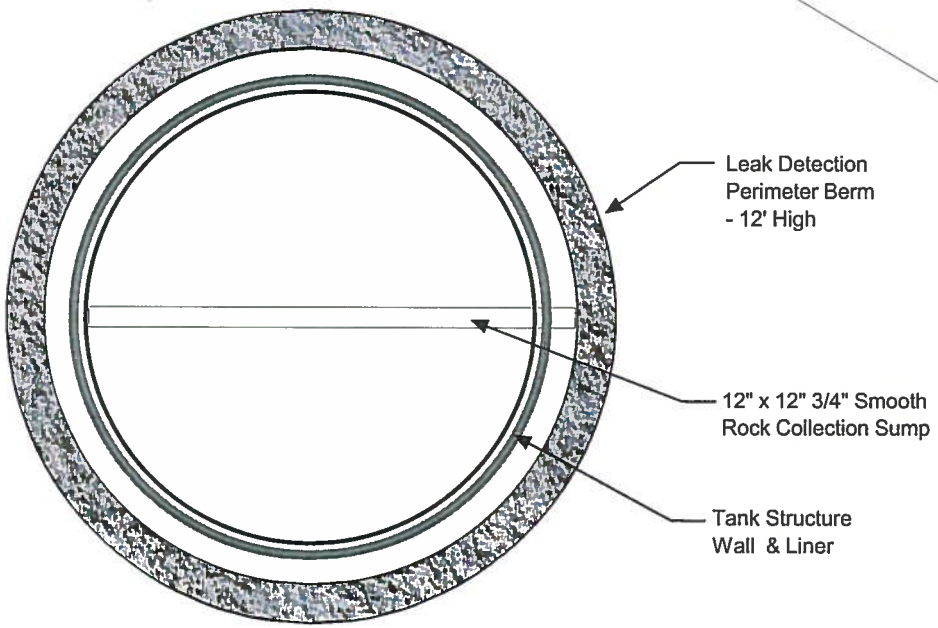

Tank Containment Structure
Plan View

* Not to Scale

Aboveground Tank - Leak Detection Details	
Author: *Fox Engineering Solutions LLC*	
Date: July 29, 2011	Sheet: 1 of 1
Revision:	

CONDITIONS OF APPROVAL

Sundry Notice Document #2542230

Williams Production RMT Company LLC

Facility ID 335612, Federal RGU 13-36-198

1. Operator will implement measures to ensure that adequate separation of hydrocarbons from the influent occurs to prevent accumulation of oil on the surface of stored completions fluids.
2. No oil is permitted on the surface of completions fluids.
3. Operator shall construct, operate and maintain tank(s) in accordance with manufacturer specifications and requirements, as provided and referenced in data submitted with and subsequent to this Form 4. .
4. Operator shall stabilize exposed soils and slopes as an interim measure during operation of tanks.
5. Operator shall conduct interim reclamation of location within 3 months of tank removal.

Deranleau, Greg

From: Dee, Lisa [Lisa.Dee@wpxenergy.com]
Sent: Thursday, June 28, 2012 2:56 PM
To: Deranleau, Greg
Subject: RE: Sulpur Creek Field Tank Sundries
Attachments: GSE Geomembrane Products Manufacturing QA Manual.pdf; Attachment to 2nd COGCC Sundry Notices for Use of High Volume Frac Tanks.pdf; Big Holding Systems MASTER ASSEMBLY MANUAL (Generation 3) March 2012 (2).pdf; 94512 WPX Tanks ffinal.pdf

Hi Greg:

Per our earlier discussion, attached please find the additional documentation requested to continue reviewing our request to utilize temporary, large volume water storage tanks in Ryan Gulch. Please review at your earliest convenience and let me know if any additional information is required. Do not hesitate to contact me with any questions or concerns.

Thanks very much for your help!

Lisa E. Dee
Regulatory Specialist
Piceance Planning Team
WPX Energy Rocky Mountain, LLC
Direct: (970) 263-2738
Cell: (720) 470-4919

Lisa.Dee@WPXEnergy.com
WPXENERGY

From: Paules, Mike
Sent: Friday, June 01, 2012 4:20 PM
To: Bittner, Tyler; O'Dell, Brian; Dee, Lisa; Mestas, April; Gardner, Michael
Cc: Odegard, Chad; Foreman, Jay
Subject: FW: Sulpur Creek Field Tank Sundries

Here is the info that COGCC is requesting that we submit to gain approval for these tanks.

I plan on introducing the permitting/approval of these temporary storage tanks to the COGA EHS Committee on June 13 to solicit interest in forming an operator group to discuss the concerns identified and the info requested. Let me know if we have any specific concerns related to the info requested or conditions for approval that we would like to negotiate with COGCC through COGA.

Mike Paules
Senior Staff Regulatory Advisor

WPXENERGY
1001 17th Street, Suite 1200
Denver, CO 80202
(303) 606-4396 office
303-629-8277 fax
michael.paules@wpxenergy.com

From: Deranleau, Greg [mailto:Greg.Deranleau@state.co.us]
Sent: Friday, June 01, 2012 3:57 PM
To: Paules, Mike
Subject: Sulpur Creek Field Tank Sundries

Mike,

Thank you for your time on the phone Wednesday to discuss this and thank you especially for assembling your Parachute staff to participate in the call. It is my understanding that the status of the tanks is as follows:

1. The tank at RGU 13-36-198 (Loc ID #335612) has been constructed, tested and is in use.
2. The tanks at RG 12-14-298 (Loc ID #335993) and RGU 31-24-198 (Loc ID #413591) have been constructed and are currently being hydrotested with fresh water in preparation for use.
3. The tank at RGU 13-24-198 (Loc ID #414369) has not been constructed, nor has the site preparation been done.

The COGCC is reviewing the four (4) sundry notices WPX has submitted to add the large tanks to locations in the Sulphur Creek Field. It is my understanding that these tanks are being used in response to BLM's preference over pits. Although it appears that significant engineering and planning has gone into your site design, COGCC still has some concern over the use of these large capacity "temporary" tanks and therefore is requesting the following additional information:

1. Please provide tank construction information from the vendor or engineer that details:
    a. Tank wall design and construction details,
    b. Tank liner anchoring details,
    c. Tank liner specifications, including installation QA/QC.
2. Please clarify that the leak detection liner extends to the top of the 12' leak detection perimeter berm. Also please clarify if that should be a 12" leak detection perimeter berm instead of 12'; correct drawings if necessary.
3. Please provide design basis for 3' foot leak detection berm, including what measures will be taken to prevent failure in the unlikely event that the tank fails catastrophically.
4. Please specify the separation measures that will be taken to prevent oil/condensate from accumulating on the surface of impounded water. From our conversation, I understand that WPX will utilize a 4-phase separator or a gun-barrel tank for pre-treatment and I understand that the tanks have a floating cover system on them to manage flashing emissions and prevent impacts to wildlife. Please provide a process flow diagram.
5. Concern has been raised that inadequate pad stability could contribute to tank failure. What measures have been taken to ensure that the pads have been constructed in such a manner that they will support the additional load on the "fill side" of the pads (i.e. are foundations necessary for the walls, does the soil have the bearing capacity to support the load, does the slope have sufficient passive strength to resist failure under load)? What measures have been taken to ensure that water (i.e. stormwater or fluid lost to the leak detection system) will not compromise the integrity of the pad under the tanks? Construction drawings approved by a Professional Engineer should address these concerns.
6. Please specify the anticipated term of service for these tanks at these locations.
7. Please indicate that the tank will be operated with a floating top (cover), and indicate how freeboard will be maintained and monitored.
8. Please describe methods used for hydrostatic testing prior to putting tanks in service.

At a minimum, the COGCC will place the following conditions of approval (COA) on these sundry notices, however, upon receipt of the requested documentation and COGCC management review, additional conditions may be presented:

1. Operator shall provide 48-hour advance notice of construction to the COGCC via Form 42 submittal.
2. Operator will implement measures to ensure that adequate separation of hydrocarbons from the influent occurs to prevent accumulation of oil on the surface of stored completions fluids.
3. No oil is permitted on the surface of completions fluids.

4. Operator will ensure engineering oversight during construction/installation of tank, leak detection system, and perimeter berm and will provide a written report documenting such activities to COGCC within 90 days of completion.
5. Operator shall stabilize exposed soils and slopes as an interim measure during operation of tanks.
6. Operator shall conduct interim reclamation of location within 3 months of tank removal.

The COGCC has the following additional information for your consideration:

1. The inclusion of the tank on the location adds more than one million gallons of storage capacity. The facility may be subject to substantial harm determination and require a facility response plan under the Federal Oil Pollution Prevention Act (http://www.epa.gov/emergencies/content/frps/index.htm).
2. Ordinarily the addition of this volume of storage capacity to an oil and gas location would be considered a substantive change and necessitate the submittal for approval of an amended Form 2A Oil and Gas Location Assessment, per Rule 303.g. However, since two of the locations were not subject to the Form 2A requirements and all are Federal locations and you are conducting the work under the direction of the mineral and surface owner, the COGCC will process these requests via Form 4 Sundry Notices.
3. Williams is required to abide by all conditions of the previously approved Form 2 Applications for Permit to Drill and Form 2As for these locations.

Upon furnishing the requested information and concurrence with the proposed COAs, staff will recommend to the Acting Director that the variances you are requesting are granted.

I look forward to further conversations about these and other methods for managing the reuse and recycling of water in the field, as I understand that it is an issue faced by most, if not all operators.

If you have any questions, please don't hesitate to call me.

Thanks,

Greg Deranleau
Oil and Gas Location Assessment Supervisor

Colorado Oil & Gas Conservation Commission
1120 Lincoln Street, Suite 801
Denver, CO 80203
303-894-2100, ext 5153

STATE OF COLORADO OIL & GAS CONSERVATION COMMISSION