Attachment to COGCC Sundry Notices for Use of High Volume Frac Tanks

Affected wellpads:

- Federal RGU 13-36-198 (Location ID 335612)
- Federal RGU 31-24-198 (Location ID 413591)
- Federal RG 12-14-298 (Location ID 335993)

Response to email from Greg Deranleau dated 6/1/2012 requesting additional information to complete pending COGCC Sundry Requests on the above pads

1. Attached for review:
    a. Tank wall design and construction details
    b. Tank liner anchoring details
    c. Tank liner specifications
    d. QA/QC procedures, including letter from the manufacturer verifying that the manufacturer had a representative on location to supervise during tank and liner construction, and that the tank was constructed according to manufacturer's specifications.
2. Revised leak detection liner specifications verifying that the leak detection liner berm is 12" in height and that the liner extends over the entire leak detection berm.
3. Please see the attached design drawings for the leak detection berms.
    a. The design drawings detail the tank volumes, anticipated precipitation volumes, tank and ramp displacement volumes, and effective size of secondary containment available
    b. All three locations have been incorporated into the Ryan Gulch Field Wide Stormwater Management Plan (COR03A115)
    c. Berms were compacted during construction to ensure integrity and will be thoroughly inspected and recorded every 14 days as part of our SWMP inspection process to ensure that no erosion, settling or rodent burrowing has occurred.
    d. In addition to the SWMP feature inspections detailed above, the pad surface will be inspected on a daily to check for cracking, settling or pooling of water. Any structural or drainage issues discovered will be immediately remedied. Please refer to attached checklist for an inventory of daily inspection items.
    e. WPX Energy has already put together Facility Response Plans for all three locations, and is working with the EPA to confirm the applicability of a Facility Response Plan. In the event that it is confirmed that FRPs are warranted, the previously-compiled FRPs will be submitted for all three locations.
4. For water originating from flowback operations, oil/condensate accumulation is prevented as follows:
    a. Water is separated through a 4-phase separator to remove oil, sand and gas
    b. This water is then sent through a flash tank. Oil accumulated in the flash tank is separated out and sent to a flare stack
    c. From the flash tank, water is sent to a frac tank and then pumped to the high volume storage tank
    d. Please note that flash tank locations and flare units are shown on the design drawings showing the secondary containment berms

    For water originating from production operations, oil/condensate accumulation is prevented as follows:

a. Water is separated through a 3-phase separator to remove gas and oil
b. This water is then sent through a production tank. Oil accumulated in the production tank is separated out and sent to a combuster
c. From the production tank, water is pumped to the high volume storage tank
d. Please note that flash tank locations and flare units are shown on the design drawings showing the secondary containment berms

Please refer to attached flow diagrams for additional detail

5. Pad stability has been verified on all three locations. Lincoln and DeVore has conducted stability inspections on all three locations, and has found the pad surface to be adequately compacted and capable of supporting the large water tanks. This report will be provided to the COGCC prior to operation of the large water tanks.
    a. The Professional Engineer made a few recommendations about on-pad drainage as part of the geotechnical review. Construction/earthwork has already begun in order to implement the sloping recommendations and will be complete by June 29, 2012
6. These large volume water storage tanks will be repermitted and moved as needed to support the 10 year drilling and completions program in Ryan Gulch
7. The large volume water tanks will have a floating cover which will remain in place whenever the tank contains water. A minimum of 2' of freeboard will be maintained to ensure that precipitation accumulation does not cause an overflow. Freeboard will be monitored via the telemetry system, which will be linked to a visual alarm system and real-time email notification system.
8. Tanks will be hydrotested before use as follows:
    a. Tank will be filled with 4' of water for 24-hour hydrotest
    b. Tank will then be filled with 8' of water for another 24-hour hydrotest
    c. Precipitation and evaporation rates will not be factored into the hydrotest process, however potential leaks can and will be monitored via the leak detection system

Attached: Manufacturer specifications for tank and liner
Specifications for Leak Detection System
Specifications and Design Calculations for Secondary Containment Berms
Daily Inspection Checklist
Completions and Production Pad Flow Diagrams
Lincoln & DeVore Geotechnical Report

TANK DESIGN INFORMATION

Description	TANK CALCULATION	Tank # 1 (No Wedge Kit)	Tank # 2 (Wedge Kit 1)	Tank # 3 (Wedge Kit 2)
Desired Volume (Gallons)	1,544,172			
Diameter (ft)	148.00	148.00	135.96	123.96
Height (ft)	12	12	12	12
# of Panels	12	12	11	10
Radius (ft)	74.00	74.00	67.98	61.98
Estimated Volume (Gallons)		1,544,174	1,303,209	1,083,237
Exact Volume PolyGon (Gallons)		1,474,577	1,233,490	1,013,357
Exact Volumer Circular Segment (Gallons)		69,596	63,797	57,997
Exact Volume Total (Gallons)		1,544,174	1,297,287	1,071,354
Circumference (ft)	464.96	464.96	427.14	389.43
Panel Length (ft)	38.75	38.75	38.75	38.75
Panel Angle (Degrees)	30.00	30.00	32.73	36.00
Panel Angle (Radians)	0.52	0.52	0.57	0.63
Chord Length (ft)	38.3052	38.3052	38.3052	38.3052
Height to Chord (ft)	2.5215	2.5215		
Wedge Angle	NA	NA	2.7273	6.0000

TANK DESIGN STRESS CALCULATIONS

TANK # 1	Elevation	Pressure (psf)	Avg. Pressure Seen by Bolt (psf)	Vertical Section (in)	Diameter (ft)	Total Force per Bolt of Free Body	Bolt Area (in2) 1" Bolt	Bolt Stress	Allowable Proof Load	Factor of Safety
			TANK CAPACITY IN GALLONS		1,544,174					
0-2 -- 2x4 MEMBER	0	824								
	4	801	804	5.2	148.00	25,794	0.7853975	32,841	120000	4
	7	785								
	10	769	769	5.06	148.00	24,006	0.7853975	30,565	120000	4
	12	754								
	15	738	737	5.25	148.00	23,866	0.7853975	30,387	120000	4
17-19 -- 2x4 MEMBER	18	721								
	21	704	700	5.48	148.00	23,655	0.7853975	30,118	120000	4
	25	679								
	30	655	655	5.73	148.00	23,142	0.7853975	29,466	120000	4
	34	631								
	38	606	610	6.03	148.00	22,679	0.7853975	28,876	120000	4
40-42 -- 2x4 MEMBER	41	589								
	44	572	563	6.37	148.00	22,132	0.7853975	28,179	120000	4
	50	538								
	56	503	503	6.79	148.00	21,077	0.7853975	26,835	120000	4
	62	469								
	68	435	442	7.29	148.00	19,864	0.7853975	25,292	120000	5
71-73 -- 2x4 MEMBER	72	415								
	75	395	384	7.93	148.00	18,776	0.7853975	23,906	120000	5
	82	353								
	90	312	312	8.77	148.00	16,859	0.7853975	21,466	120000	6
	97	270								
	104	229	241	9.96	148.00	14,799	0.7853975	18,843	120000	6
106-108 -- 2x4 MEMBER	107	212								
	110	194	211	11.8	148.00	15,348	0.7853975	19,542	120000	6
	118	152								
	125	109	139	15.4	148.00	13,173	0.7853975	16,772	120000	7
	133	66								
	140	23	33	37.18	148.00	7,541	0.7853975	9,601	120000	12
	144	0								

TANK DESIGN STRESS CALCULATIONS

TANK CAPACITY IN GALLONS 1,303,209

TANK # 2	Elevation	Pressure (psf)	Avg. Pressure Seen by Bolt (psf)	Vertical Section (in)	Diameter (ft)	Total Force per Bolt of Free Body	Bolt Area (in2) 1" Bolt	Bolt Stress	Allowable Proof Load	Factor of Safety
0-2 -- 2x4 MEMBER	0	824								
	4	801	804	5.2	135.96	23,696	0.7853975	30,170	120000	4
	7	785								
	10	769	769	5.06	135.96	22,054	0.7853975	28,079	120000	4
	12	754								
	15	738	737	5.25	135.96	21,925	0.7853975	27,915	120000	4
17-19 -- 2x4 MEMBER	18	721								
	21	704	700	5.48	135.96	21,731	0.7853975	27,669	120000	4
	25	679								
	30	655	655	5.73	135.96	21,260	0.7853975	27,069	120000	4
	34	631								
	38	606	610	6.03	135.96	20,834	0.7853975	26,527	120000	5
40-42 -- 2x4 MEMBER	41	589								
	44	572	563	6.37	135.96	20,332	0.7853975	25,888	120000	5
	50	538								
	56	503	503	6.79	135.96	19,362	0.7853975	24,653	120000	5
	62	469								
	68	435	442	7.29	135.96	18,249	0.7853975	23,235	120000	5
71-73 -- 2x4 MEMBER	72	415								
	75	395	384	7.93	135.96	17,249	0.7853975	21,962	120000	5
	82	353								
	90	312	312	8.77	135.96	15,488	0.7853975	19,720	120000	6
	97	270								
	104	229	241	9.96	135.96	13,596	0.7853975	17,311	120000	7
106-108 -- 2x4 MEMBER	107	212								
	110	194	211	11.8	135.96	14,100	0.7853975	17,953	120000	7
	118	152								
	125	109	139	15.4	135.96	12,101	0.7853975	15,408	120000	8
	133	66								
	140	23	33	37.18	135.96	6,928	0.7853975	8,820	120000	14
	144	0								

TANK DESIGN STRESS CALCULATIONS

TANK CAPACITY IN GALLONS 1,083,237

TANK # 3	Elevation	Pressure (psf)	Avg. Pressure Seen by Bolt (psf)	Vertical Section (in)	Diameter (ft)	Total Force per Bolt of Free Body	Bolt Area (in2) 1" Bolt	Bolt Stress	Allowable Proof Load	Factor of Safety
0-2 -- 2x4 MEMBER	0	824								
	4	801	804	5.2	123.96	21,604	0.7853975	27,507	120000	4
	7	785								
	10	769	769	5.06	123.96	20,106	0.7853975	25,600	120000	5
	12	754								
	15	738	737	5.25	123.96	19,989	0.7853975	25,451	120000	5
17-19 -- 2x4 MEMBER	18	721								
	21	704	700	5.48	123.96	19,812	0.7853975	25,226	120000	5
	25	679								
	30	655	655	5.73	123.96	19,383	0.7853975	24,679	120000	5
	34	631								
	38	606	610	6.03	123.96	18,995	0.7853975	24,185	120000	5
40-42 -- 2x4 MEMBER	41	589								
	44	572	563	6.37	123.96	18,537	0.7853975	23,602	120000	5
	50	538								
	56	503	503	6.79	123.96	17,653	0.7853975	22,476	120000	5
	62	469								
	68	435	442	7.29	123.96	16,637	0.7853975	21,183	120000	6
71-73 -- 2x4 MEMBER	72	415								
	75	395	384	7.93	123.96	15,726	0.7853975	20,023	120000	6
	82	353								
	90	312	312	8.77	123.96	14,121	0.7853975	17,979	120000	7
	97	270								
	104	229	241	9.96	123.96	12,395	0.7853975	15,782	120000	8
106-108 -- 2x4 MEMBER	107	212								
	110	194	211	11.8	123.96	12,855	0.7853975	16,368	120000	7
	118	152								
	125	109	139	15.4	123.96	11,033	0.7853975	14,048	120000	9
	133	66								
	140	23	33	37.18	123.96	6,316	0.7853975	8,042	120000	15

BIG HOLDING SYSTEMS

MODEL: BH–1000

CAPACITY: 1,000,000 US GAL
TANK SIZE: 120' DIA x 12' HIGH
(TOTAL 11 SEGMENTS)

PROFESSIONAL ENGINEER — PROVINCE OF BRITISH COLUMBIA — C. N. SARKAR # 15300

PROFESSIONAL ENGINEER — C.N. SARKAR — MEMBER 21106 — SASKATCHEWAN

PROFESSIONAL ENGINEER ALBERTA — CHANDRA SARKAR

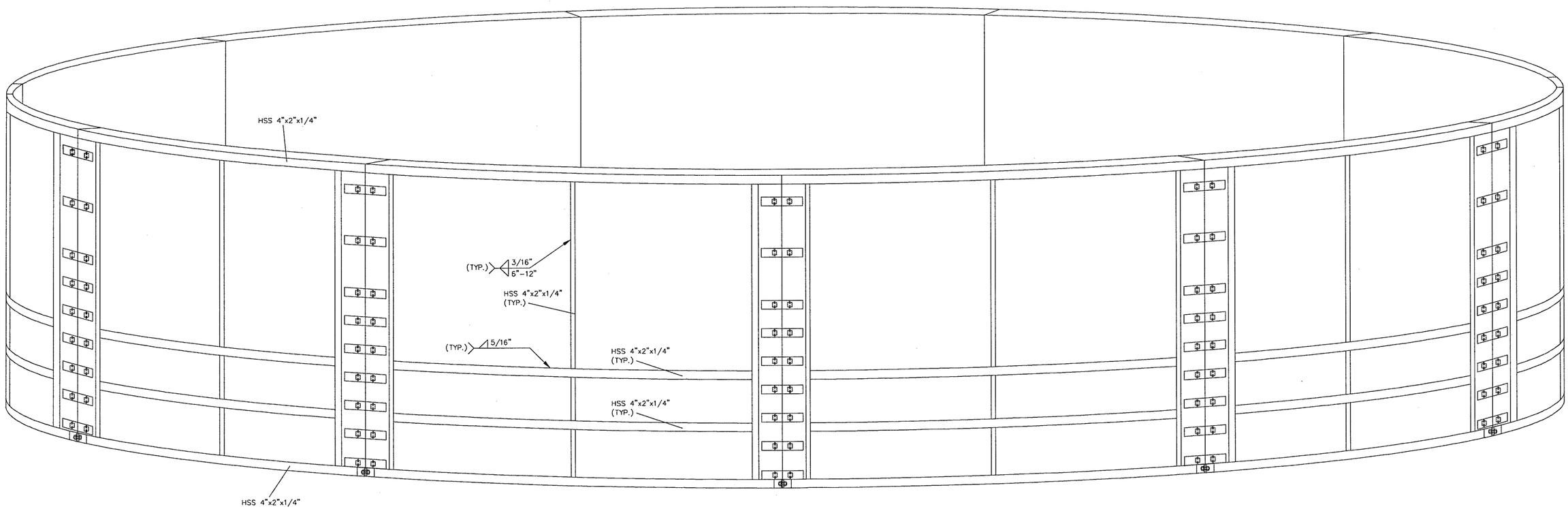

NOTES:
1. LIFTING POINT WILL BE DESIGNED IN THE SHOP AFTER ASSEMBLY.
2. ALL WELDING ON THE BOTTOM (HSS 4"x2"x1/4") NEEDS TO BE INSPECTED ACCORDING TO PLATINUM STANDARDS.

This drawing is Sole Property of Big Holding Systems Ltd. and may not be disclosed or copied to third party without written authorization of Big Holding Systems Ltd.

BIG HOLDING SYSTEMS LTD.

BIG HOLDING SYSTEMS

1,000,000 US GAL TANK
MODEL: BH–1000

DRAWING NO. BH10–004–3308 REV. A

BIG HOLDING SYSTEMS

MODEL: BH-1500

CAPACITY: 1,500,000 US GAL
TANK SIZE: 148' DIA x 12' HIGH
(TOTAL 14 SEGMENTS)

PROFESSIONAL ENGINEER C.N. SARKAR MEMBER 21106 SASKATCHEWAN

PROFESSIONAL PROVINCE OF BRITISH COLUMBIA C. N. SARKAR # 15300 ENGINEER

PROFESSIONAL ENGINEER ALBERTA CHANDRA SARKAR

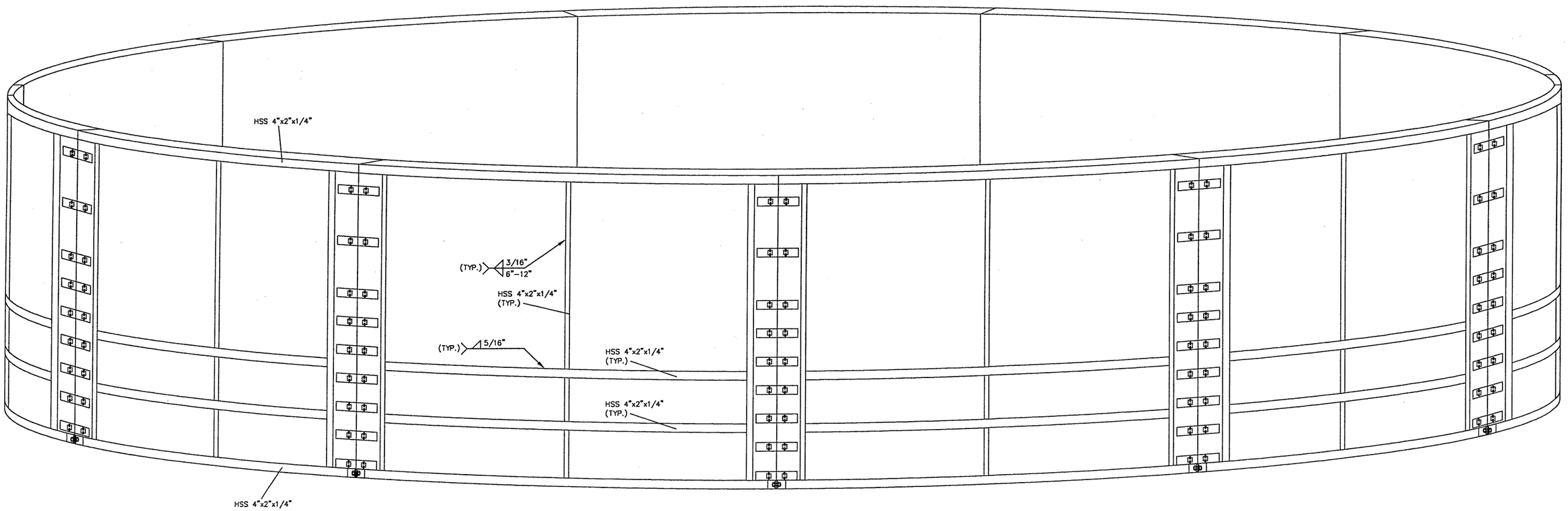

NOTES:
1. LIFTING POINT WILL BE DESIGNED IN THE SHOP AFTER ASSEMBLY.
2. ALL WELDING ON THE BOTTOM (HSS 4"x2"x1/4") NEEDS TO BE INSPECTED ACCORDING TO PLATINUM STANDARDS.

This drawing is Sole Property of Big Holding Systems Ltd. and may not be disclosed or copied to third party without written authorization of Big Holding Systems Ltd.

BIG HOLDING SYSTEMS LTD.

BIG HOLDING SYSTEMS

1,500,000 US GAL TANK
MODEL: BH-1500

DRAWING NO. BH10-004-3302

REV. A1

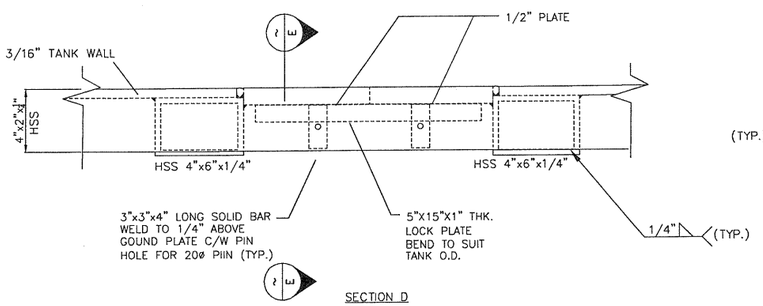

SECTION D

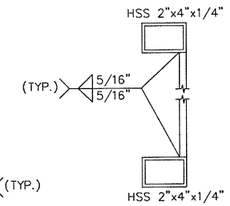

SECTION E

ONLY 1/2" PLATE SHOWN FOR CLARITY

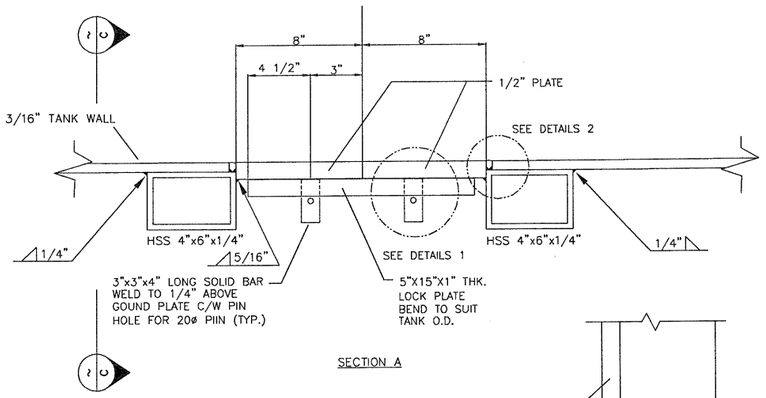

SECTION A

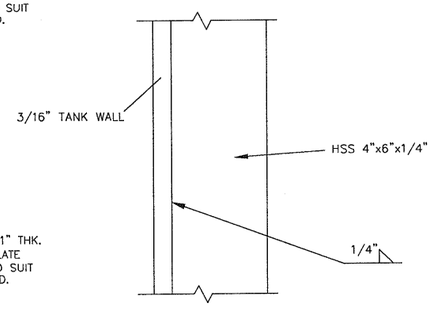

SECTION C

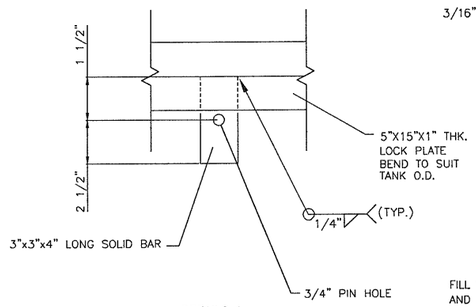

DETAILS 1

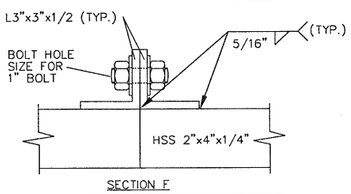

SECTION F

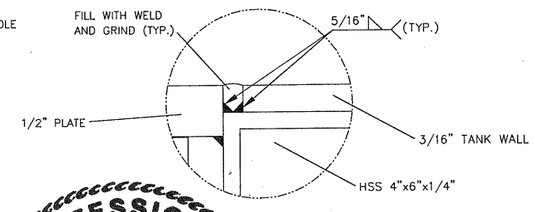

DETAILS 2

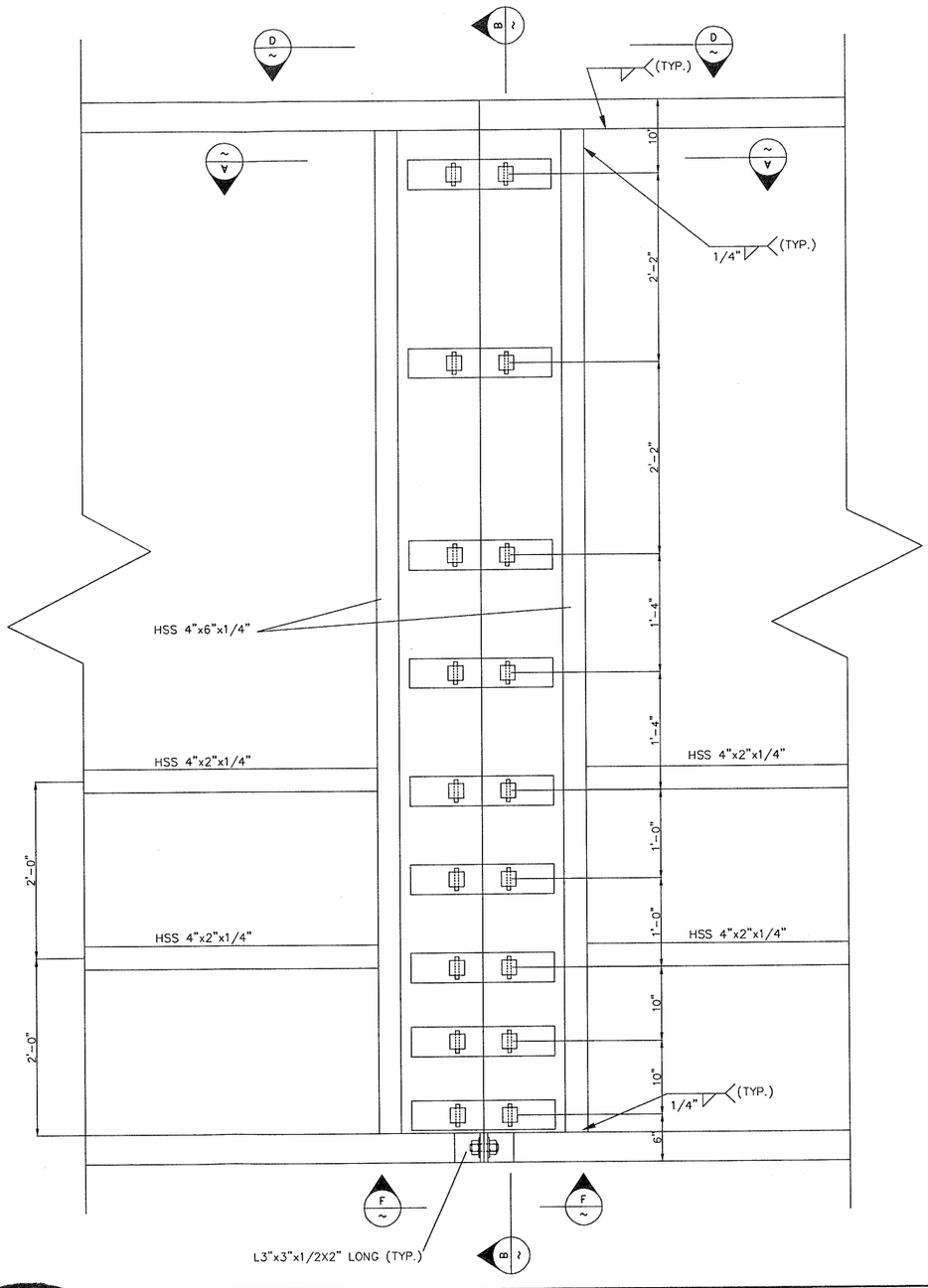

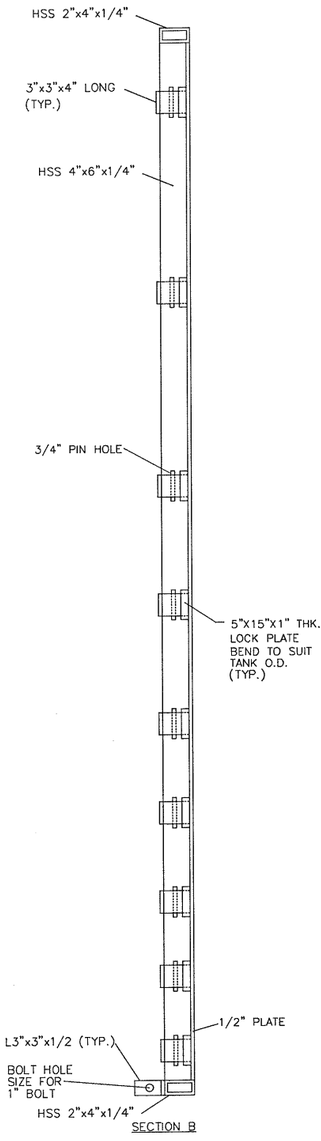

SECTION B

NOTES:
1. LIFTING POINT WILL BE DESIGNED IN THE SHOP AFTER ASSEMBLY.
2. ALL WELDING ON THE BOTTOM (HSS 4"x2"x1/4") NEEDS TO BE INSPECTED ACCORDING TO PLATINUM STANDARDS.

PROFESSIONAL ENGINEER — PROVINCE OF BRITISH COLUMBIA — C.N. SARKAR # 15300

PROFESSIONAL ENGINEER — C.N. SARKAR MEMBER 21106 — SASKATCHEWAN

PROFESSIONAL ENGINEER ALBERTA — CHANDRA SARKAR

This drawing is Sole Property of Big Holding Systems Ltd. and may not be disclosed or copied to third party without written authorization of Big Holding Systems Ltd.

BIG HOLDING SYSTEMS LTD.

BIG HOLDING SYSTEMS

JOINT SECTION DETAILS FOR ALL MODEL

DRAWING NO. BH10-004-3309

REV. A

BIG HOLDING SYSTEMS LTD.

TO WHOM IT MAY CONCERN

Re: WPX LARGE WATER STORAGE TANKS

Big Holding Systems (BHS) has very comprehensive installation manuals that we provided with each of our tank systems.

WPX has purchased numerous tank systems from BHS and with these tanks have requested our staff to be on site for:

- Site inspection and assistance to ensure the civil work on locations is done as per the Engineered Drawings prior to tank assembly
- Overall site supervision of the tank assembly as per our Engineered drawings, instruction manual and standards.

BHS supplied two very capable and competent senior staff members to WPX for this process: Hugh Morrison, North America Field Operation Manager and Lee Armstrong, Field Operations Superintendent, were on site during the complete pre-assembly and assembly process of the tanks.

As well , Big Holding System had a staff member on site, Steve Story, NW USA Field Manager, during the initial filling of the tanks.

Regards,

George Briggs

Director Big Holding Systems Ltd.

Suite 600, 703 -6th Avenue SW, Calgary, AB, T2PT9 phone 403-930-1433

WPX Energy Rocky Mountain, LLC

Aboveground Tank Leak Detection Details

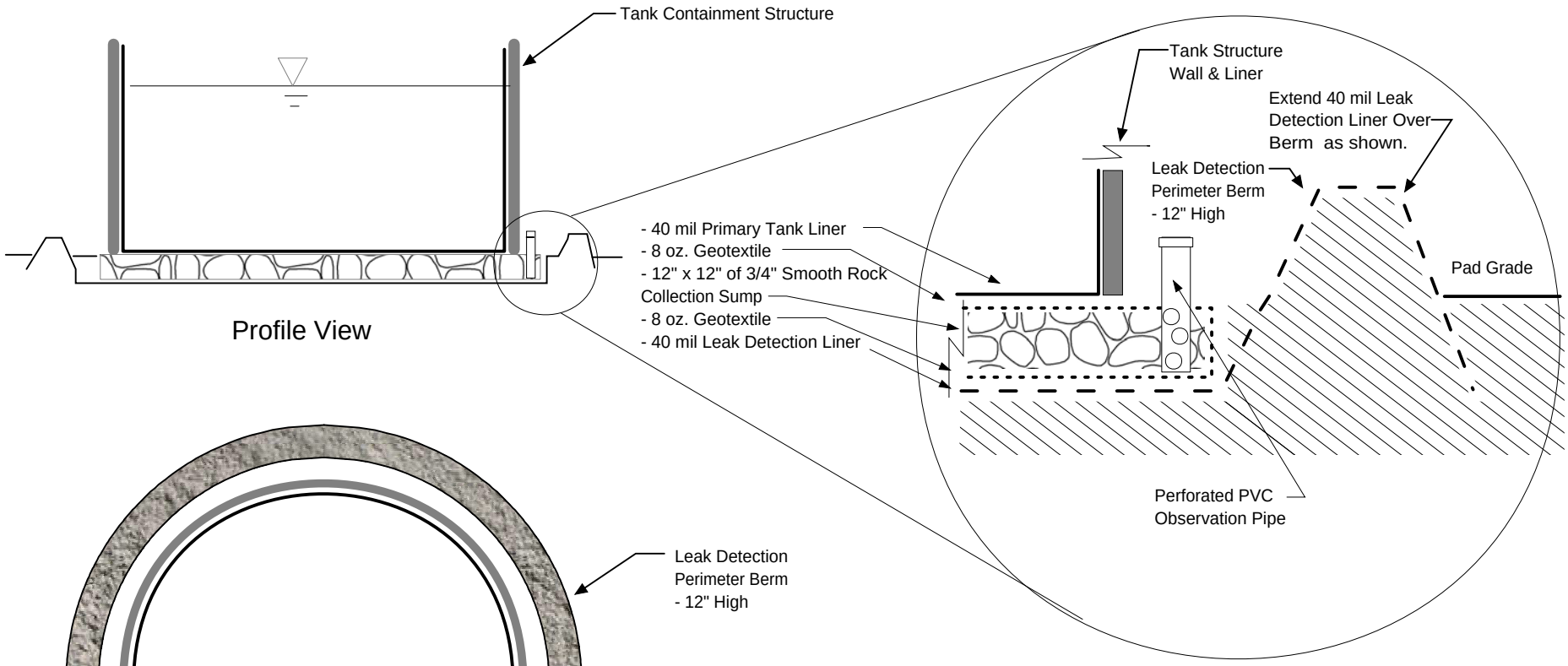

Profile View

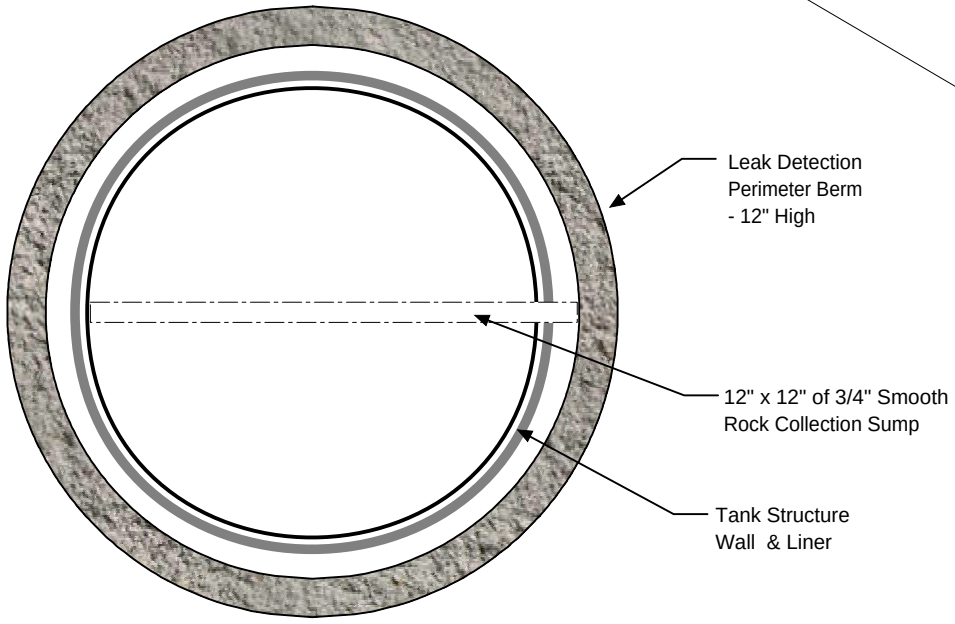

Tank Containment Structure

Plan View

* Not to Scale

Aboveground Tank - Leak Detection Details	
Author: Fox Engineering Solutions, Inc.	
Date: July 29, 2011	Sheet: 1 of 1
Revision: June 12, 2012	

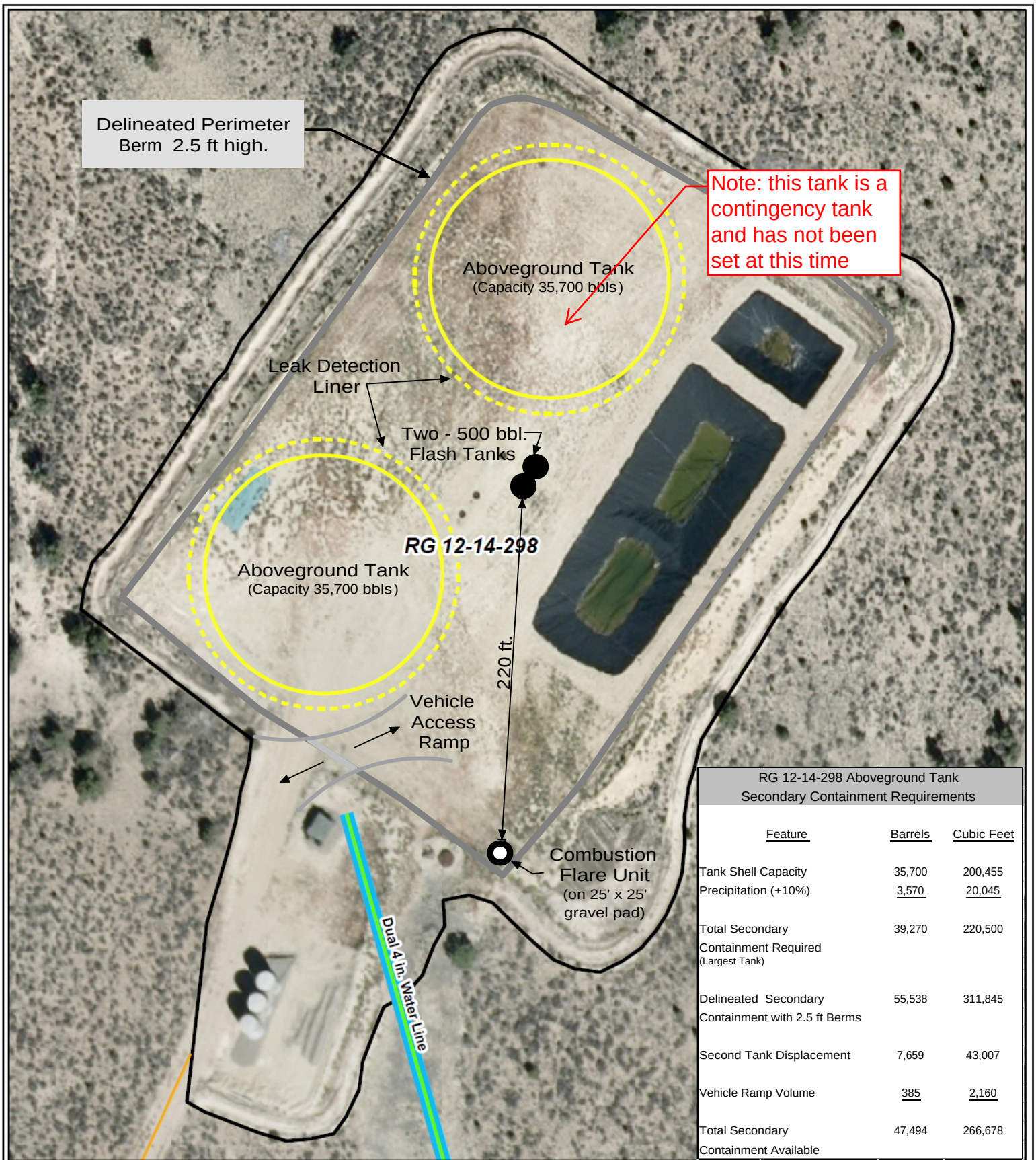

RG 12-14-298 Aboveground Tank
Secondary Containment Requirements

Feature	Barrels	Cubic Feet
Tank Shell Capacity	35,700	200,455
Precipitation (+10%)	3,570	20,045
Total Secondary Containment Required (Largest Tank)	39,270	220,500
Delineated Secondary Containment with 2.5 ft Berms	55,538	311,845
Second Tank Displacement	7,659	43,007
Vehicle Ramp Volume	385	2,160
Total Secondary Containment Available	47,494	266,678

Legend

- Producing Well
- Tank (150' Diameter)
- Tank Buffer (10')
- Road
- Gas Line
- Single 4 in. Water Line
- Dual 4 in. Water Line
- Pad Disturbance

N W E S

0 40 80 160 Feet

WPXENERGY

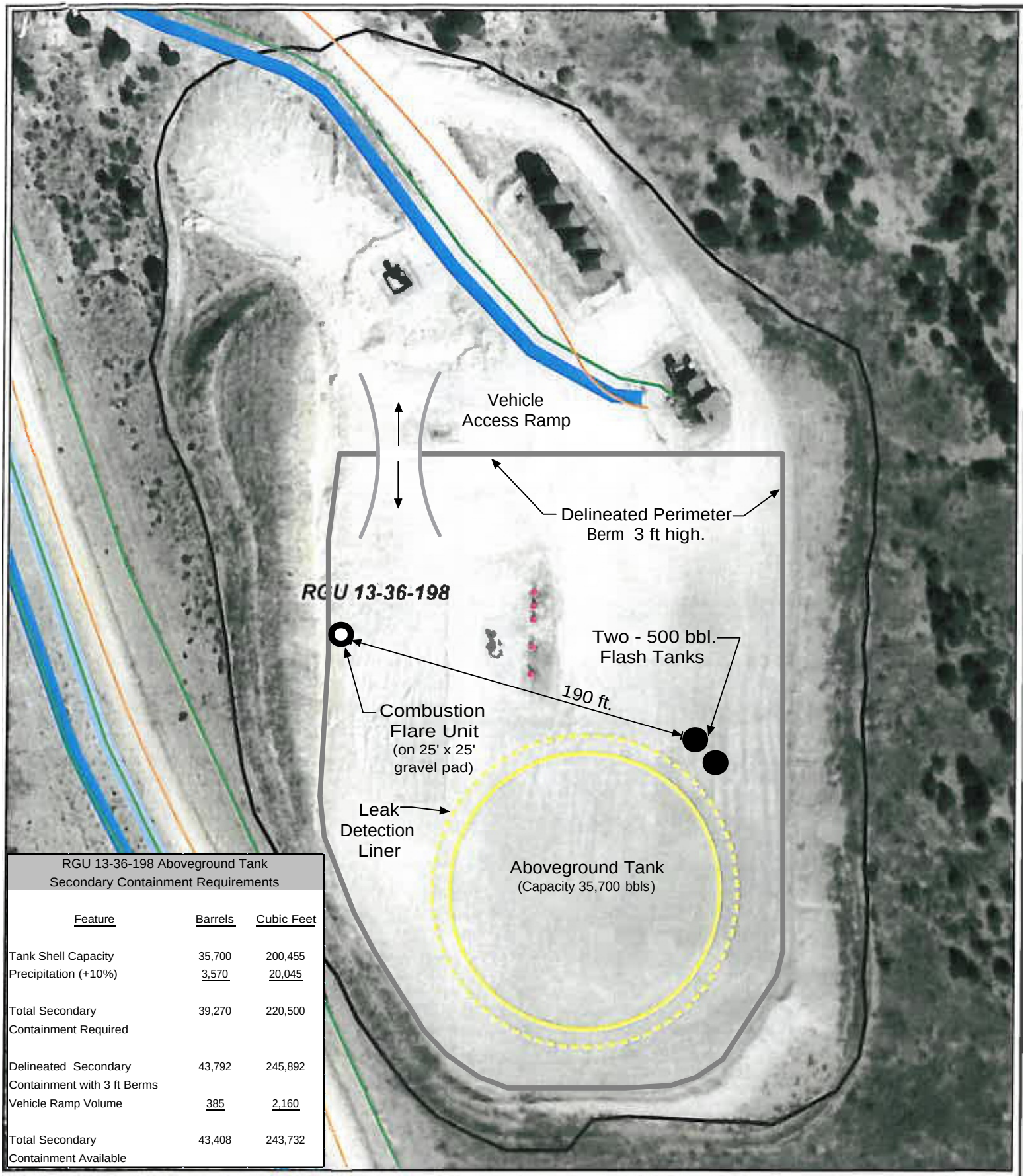

RGU 13-36-198 Aboveground Tank
Secondary Containment Requirements

Feature	Barrels	Cubic Feet
Tank Shell Capacity	35,700	200,455
Precipitation (+10%)	3,570	20,045
Total Secondary Containment Required	39,270	220,500
Delineated Secondary Containment with 3 ft Berms	43,792	245,892
Vehicle Ramp Volume	385	2,160
Total Secondary Containment Available	43,408	243,732

Legend

- Producing Well
- Tank (150' Diameter)
- Tank Buffer (10')
- Road
- Gas Line
- Single 4 in Water Line
- Dual 4 in Water Line
- Pad Disturbance

N
W E
S

0 35 70 140 Feet

WPXENERGY

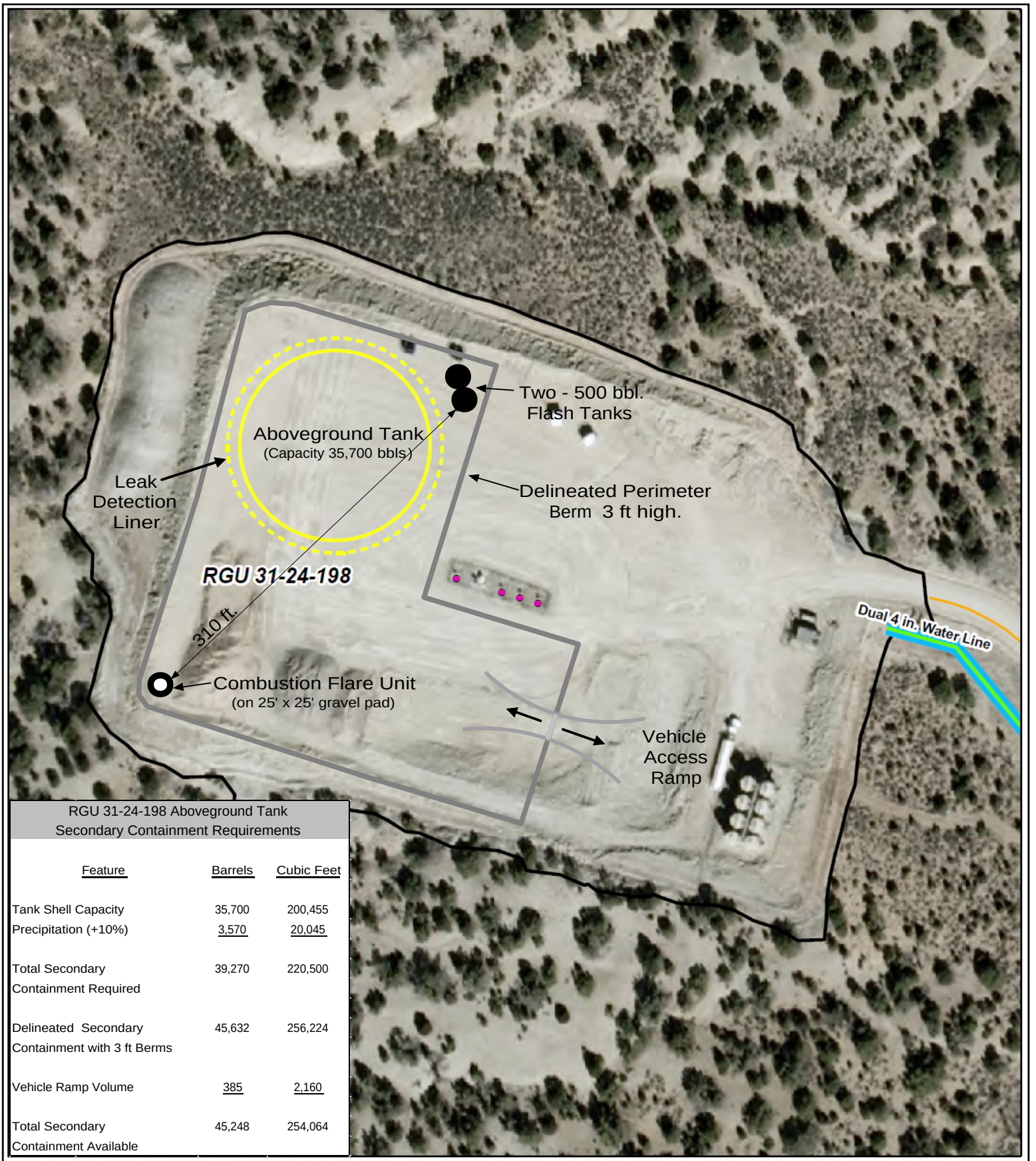

RGU 31-24-198 Aboveground Tank
Secondary Containment Requirements

Feature	Barrels	Cubic Feet
Tank Shell Capacity	35,700	200,455
Precipitation (+10%)	3,570	20,045
Total Secondary Containment Required	39,270	220,500
Delineated Secondary Containment with 3 ft Berms	45,632	256,224
Vehicle Ramp Volume	385	2,160
Total Secondary Containment Available	45,248	254,064

Legend

- Producing Well
- Tank (150' Diameter)
- Tank Buffer (10')
- Road
- Gas Line
- Single 4 in. Water Line
- Dual 4 in. Water Line
- Pad Disturbance

N
W E
S

0 50 100 200 Feet

WPXENERGY

WPX Energy Water Storage Facility Inspection Checklist

Inspector Name: _____ Inspector Company: _____ Inspection Date: _____

A. Location Information

Facility ID #: _____ Facility Name: _____ State: _____ County: _____

Latitude: _____ Longitude: _____

B. Pad Condition	**Yes**	**No**	**N/A**	**Repair Required**
1 Pad containment berm is in good condition	○	○	○	○
2 Pad site is free of accumulated storm water or pooling	○	○	○	○
3 Pad drainage is in good shape and functioning properly	○	○	○	○
4 Site is free of trash and unauthorized items/equipment.	○	○	○	○
5 No visible ground cracking on the pad site	○	○	○	○
6 No visible ground shifting on the pad site	○	○	○	○

C. Water Storage Tanks	**Yes**	**No**	**N/A**	**Repair Required**
1 Secondary tank containment is in good condition	○	○	○	○
2 Secondary tank containment is free of accumulated storm water	○	○	○	○
3 Secondary tank containment is free of stains and other signs of leaks	○	○	○	○
4 Outside tank panels are structurally sound	○	○	○	○
5 Outside tank panels are plumb (no visible shifting or settling)	○	○	○	○
6 Pins located at tank panel seams are in place	○	○	○	○
7 Tank liner is structurally sound with no leaks	○	○	○	○
8 Liner clamps are in place	○	○	○	○
9 Floating cover is in place and functioning properly	○	○	○	○

C. Tank Levels	**Yes**	**No**	**N/A**	**Repair Required**
1 Tank freeboard level is clearly marked and visible	○	○	○	○
2 Tank level is at or below freeboard	○	○	○	○
3 Tank level indicator is functioning properly	○	○	○	○
4 Tank freeboard alarm is functioning properly	○	○	○	○

D. Connected Piping, Pipelines and Pumping Equipment				
1 Tank piping, valves and fittings are functioning properly with no leaks	○	○	○	○
2 Inlet and outlet waterlines from the field functioning properly with no leaks.	○	○	○	○
3 Pumping equipment has proper spill containment.	○	○	○	○
4 Pumping equipment is functioning properly with no leaks	○	○	○	○

If you answered "No" to any questions, please provide explanation below:

If you answered "Repair Required" to any questions, please provide description of required repair and corrective actions below:

Date All Repairs Completed By: _____

Inspector Signature: _____ Date: _____

Completions Pad Simplified Flow Diagram

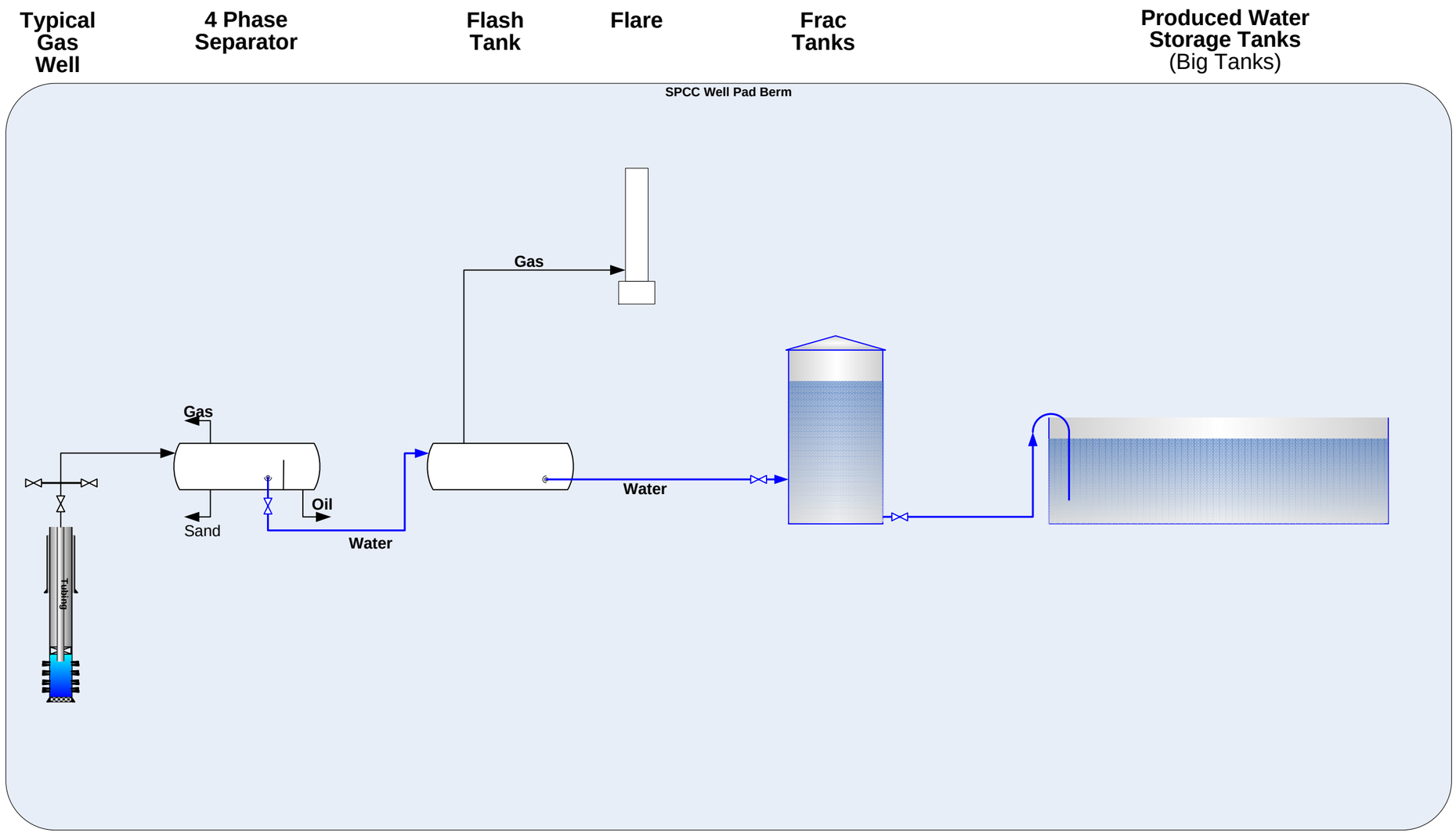

Rev	Description	Date
0	Original Dwg For Discussion	6/6/2012

WPX Energy Rocky Mountain, LLC

Completions Pad

Simplified Flow Diagram

Drawn By: JJL | | Dwg No: xxxx

FULL FILENAME

Q:\ENGINEERING\FACILITIES\BIG TANKS-PRODUCTION_COMPLETIONS.VSD

Production Pad Simplified Flow Diagram

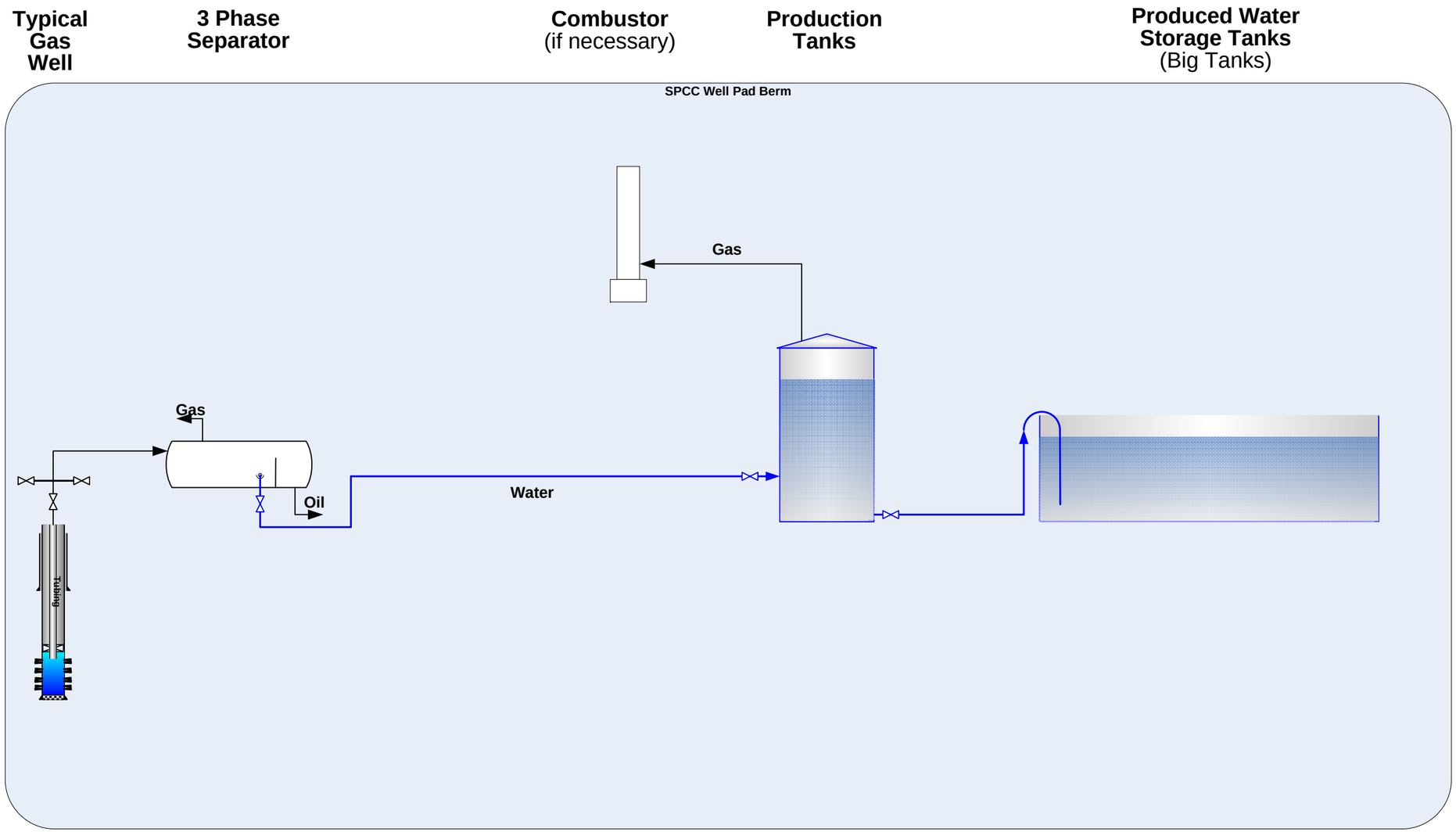

Rev	Description	Date
0	Original Dwg For Discussion	6/6/2012

WPX Energy Rocky Mountain, LLC

Production Pad

Simplified Flow Diagram

Drawn By: JJL | | Dwg No: xxxx

FULL FILENAME

Q:\ENGINEERING\FACILITIES\BIG TANKS-PRODUCTION_COMPLETIONS.VSD