MASTER ASSEMBLY MANUAL

-FOR-

LARGE SECTIONAL "GENERATION 3" WATER STORAGE TANKS

BHS-1500

BHS-1250

BHS-1000

INSTALLATION INSTRUCTIONS FOR LARGE SECTIONAL WATER STORAGE TANKS

Think Safety First

Big Holding Systems Energy Services has a commitment to provide quality tank components that can be safely erected. However, the safety commitment and job site practices of the erector are beyond the control of BHSES. It is strongly recommended that safe working conditions and accident prevention practices are the top priority on any job site. Local, state and federal safety and health standards should always be followed to help insure worker safety. Make certain all employees know the safest and most predictive way of erecting a BHSES holding tank. Emergency telephone numbers, location of first aid stations and emergency procedures should be known to all employees. Daily meetings highlighting safety procedures, the use of hard hats, steel toed shoes and other proper equipment for handling heavy materials are recommended erection practices. BHSES intends that this manual be interpreted and administered with sound judgment consistent with good safety practices.

INSTALLATION PROCEDURE FOR LARGE WATER STORAGE

This tank installation procedure is specifically for the BHS-1500 (12 segments), BHS-1250 (11 segments) and BHS-1000 (10 segments) Large Water Storage Tanks. This design consists of tank segments that measure 38.75 feet long and 12 feet high, and feature a bolt together design.

1. The area where the water storage tank will be placed must be prepared and brought to a state of level that is +/- 1-2 inches around the circumference of the tank walls.

2. Grade and compact tank site with granular soils. Ensure that the grade is level where the tank(s) will be placed. Ensure that there are no sharp edges or rocks within the prepared area. Add 1-2 inches of fine sand cover on top of the compacted granular soils. Immediately prior to the delivery of the tanks, install 2 layers of #8 to #12 felt geotextile on the tank installation area and secure with sand bags.

3. Now establish the exact center of the tank area.

4. Mark with spray paint the circumference of the tank to be erected as follows:

Tank	Radius	Circumference
a. BHS-1500 (1.50 MM Gallons) –	74 Ft.	148 Ft.
b. BHS-1250 (1.25 MM Gallons) –	67 Ft. 10 In.	135 Ft. 8 In.
c. BHS-1000 (1.00 MM Gallons) –	61 Ft. 8 In.	123 Ft. 4 In.

5. Ensure that the tanks have at least 30 feet between adjacent tank walls. This space is required for tank assembly.

6. Immediately prior to delivery of the tank, ensure the following equipment is available:

   a. One all-terrain, 60 ton capacity rubber tired articulated crane with an auxiliary winch.
   b. One all-terrain, rubber tired "scissor lift" controllable from its platform. The platform to be at least an 8 ft. square with guard rails.
   c. One 2 ton crew truck fitted with a knuckle boom and a winch.
   d. Two 15 foot spreader bars with lift strapping.
   e. Two 16 foot step ladders.
   f. One 5000 watt generator
   g. Laser level and 2 X 200 ft. tape measures.
   h. Various sizes of mallets and sledge hammers
   i. Minimum 200 sand bags to assist in windy conditions.
   j. At least 3 personal harnesses, and at least 1 stretcher harness, that will be used by workers inside the erected tank to provide for man lift evacuation in the unlikely event of an injury.

7. On the day of tank delivery, ensure 5-6 installation personnel and one crane operator are available to provide labor to install the tanks and, subject to the client's experience with tank and liner installation, supervision of Big Holding Systems' personnel. All personnel should be provided with high visibility vests.

8. Unload the following equipment from the tank delivery trucks (per tank):

   a. 12, 11 or 10 tank sections (38.75 feet long X 12 feet high, approximately 6465 lbs., or 2930 kg, per segment). If possible, arrange to have the delivery truck follow the crane to allow for a single handling and unloading of each segment. If this is not possible, provide sufficient room outside of the tank bottom area, and lay the segments outside of this planned perimeter.
   b. 10 outside and 5 inside installation supports. These supports are required to support the tank segments during installation, 2 outside supports and 1 inside support per segment.

c. 1 inch diameter bolts and studs, approximately 15 sets per tank segment.
d. Approximately 10 liner clips per segment purchased, each with a retainer bolt.
e. 2 – 8 inch 150# ANSI "candy cane" design fluid nozzles each c/w support brackets, 8 inch flexible hose, splash plate and butterfly valve.
f. 1 level indicator.
g. One 40 mil tank liner, rolled up, suitable for the tank size purchased.
h. Strips of 40 mil liner material for each tank section, 2 ft. wide X 12 ft. tall, plus tape.
i. Tank skirt strips, 3 ft. wide of 40 mil liner material sufficient for the circumference of the tank being erected, plus tape
j. One diameter floating insulation cover (if ordered).

9. Prepare the tank sections for installation. If the tank being installed is a BHS-1500 proceed to the next step. **NOTE:** If the tank being installed is not a BHS-1500 please go first to Schedule 1 prior to next step.

10. Plan your layout so that you have a joint at each place where you want to have a candy cane over the top of the tank section as they must be bolted to the tank structure at a joint.

TANK INSTALLATION:

General:

11. Conduct safety meeting before each day's work to describe the day's activities and discuss potential hazards. Document meeting, any concerns and risk mitigation activities.

12. Ensure work permits are issued by the Site Operator as required.

13. Always use new bolts for each installation as failure to do so creates an unnecessary risk of joint failure of the assembly.

Event Sequence:

14. Before starting assembly, the client should determine where the candy cane fluid nozzles and the level indicator are to be located. Normally these are located at 90 degrees to each other; especially if an insulation cover has been ordered and specified to have openings in the cover pre-fit in the factory.

15. CAREFULLY spot the liner in the center of the tank position as marked.

16. CAREFULLY unfold the liner until the entire floor has been exposed and matches up with the perimeter line drawn with spray paint.

17. CAREFULLY roll the liner back toward its center to provide minimum 15 feet of work space between the floor perimeter and the liner material.

18. Erect each tank section by carefully lifting each section at the designated lifting locations and aligning **each end** of each section with the line previously made on the bedding material per instruction number 4 above. To ensure proper placement of each panel and therefore easy bolt-up for the last panel, please refer to the **Schedules** at the back of this manual.

    a. Schedule 2: Model BH-1500 (12 segments, erected inside tank diameter = 148’ 0”)
    b. Schedule 3: Model BH-1250 (11 segments, erected inside tank diameter = 135’ 8”)
    c. Schedule 4: Model BH-1000 (10 segments, erected inside tank diameter = 123’ 4”)

NOTE: Each section weighs approximately 6465 pounds and for this reason BHSES recommends that segment supports are always used during the installation of the tank sections.

NOTE: At least the first 90 degrees of tank sections should be braced on both sides until all 90 degrees are fully bolted together even on calm days, and it is highly recommended that bracing be used on all segments of the tank being erected as the circle is completed.

19. Adjust the position of each tank section until the bolt holes align on both panels, place the spacer washers on each side of the two tank sections to be bolted together and insert bolts into one side of a set of two sections and then place nut on other end of bolt and hand tighten.

20. Complete erection of all tank sections and then perform final tightening of bolts to a torque rating of 250 foot pounds. **NOTE:** Leave bolts where the candy cane is attached only finger tight until candy cane is attached and adjusted.

21. Liner Installation:

    a. Lower 2 people into the assembled tank with the scissor lift and one of the step ladders. Place the 11 – 40 mil HDPE strips (2 ft. X 12 ft.) inside the tank. Tape a strip covering each inside joint ensuring that there is approximately 6 inches of slack in the horizontal direction which will allow the strip to stay in place with any movement of the tank.

    b. Place the 40 mil HDPE strips (3 ft. wide) inside the tank. Tape the strip covering the inside circumference approximately 18 inches from the bottom of the tank which will allow the strip to protect the tank liner from being damaged between the tank wall and the compacted ground.

c. CAREFULLY unroll the tank liner to the inside edge of the assembled tank. Use 2 of the adjacent liner eyes and ropes with clips and feed the ropes to the scissor lift. Have one person leave the inside of the tank.

d. Initially from the crane or the knuckle boom, and later from the scissor lift, pull the liner wall up and fold the surplus liner over the top of the tank channel. Install the liner clips over the liner and onto the top tank channel spaced approximately 4 feet apart. The liner clips shall be installed with the ½ inch retainer bolt on the outside of the tank wall. As each clip is put in place, install the retainer bolt on the outside of the tank wall (the clips are designed to be a friction fit for the liner wall and, if properly installed, won't damage the liner). **GENTLY** adjust the liner bottom to the tank wall to eliminate extra tension from the liner wall on the clips. Continue around the perimeter of the tank until the liner is fully installed. **NOTE:** Should a liner clip accidently be dropped inside the tank, this must be immediately examined and reported. The likelihood of damage to the bucket liner is high should this occur, so repair may be required.

22. Identify the position where the “candy cane” fluid nozzles will be placed. Inside the tank where the nozzle will be located, place 4-6 layers of geotextile to protect the liner from any accidental impact from the nozzle assembly.

23. Using the crane, CAREFULLY install the “candy cane” nozzle over the lip of the tank and secure into place.

24. Install the 8 inch diameter X 10 ft. flexible hose on the inside of the tank connected to the inside nozzle connection. CAREFULLY place the splash plate inside the tank and secure the flexible hose.

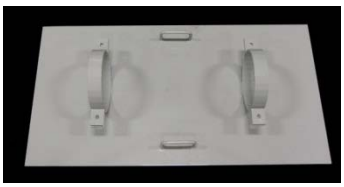

25. Install the supplied digital level sensor to mounting tabs on candy cane and adjust per instructions supplied by level sensor manufacturer**.** **NOTE:** Electric power supply to digital level sensor to be supplied by customer. All wiring should be done by an experienced/licensed electrician.

26. Repeat Steps 22 to 23 inclusive for the second “candy cane” nozzle.

27. CAREFULLY inspect the entire tank liner floor and walls for blemishes. The tank liner is specifically designed with an outside white layer covering the inside black material, which allows for more obvious appearance of any damage to the upper white layer. Repair and vacuum test any blemishes, documenting all repairs for future reference.

Insulated Cover Installation:

28. CAREFULLY place the insulation cover bundles inside the tank. Unwrap the cover casings and select the edge casings that have slots, and place these casings at the “candy cane” nozzles.

29. Assemble the insulation cover as per the installation map, taking care to ensure that the cover lays over the 8 inch flexible hoses. Install the ballast tubes along the perimeter of the cover and evenly spaced elsewhere to ensure the cover will remain in place during windy conditions.

30. CAREFULLY inspect the entire insulation cover and the tank liner walls for blemishes. Repair and vacuum test any blemishes, documenting all repairs for future reference.

31. The tank is now ready to be filled with fluid and be turned over to tank operations. During the filling process, observe the insulation cover to ensure that the cover does not bind on the nozzles or tank walls.

PLEASE NOTE: DISMANTLING OF THE STORAGE TANK FOR TRANSPORT AND USE AT ANOTHER SITE SHOULD BE ACCOMPLISHED IN THE REVERSE MANNER OF THE PRECEDING STEPS. ALSO, DO NOT FORGET TO USE THE SEGMENT SHIPPING SUPPORT THAT WAS SUPPLIED WITH THE ORIGINAL TANK AS IT WILL HELP PROTECT THE INTEGRITY OF THE SECTIONS.

FOR INFORMATION PLEASE CONTACT:

600, 703 Sixth Avenue Southwest
Calgary, Alberta T2P 0T9
Phone: (403) 930-1433
Website: www.bigholdingsystems.com

THIS SYSTEM IS ENGINEERED & PRODUCED BY
GLOBAL FABRICATION INC., DuBois, PA.
Phone (814) 372-1500
www.globalfabricationinc.com

SCHEDULE # 1

If installing BHS-1250 (which is only 11 segments) you will need to first have on hand Wedge Kit # BHS-1250 which is a 2.72 degree wedge. This wedge, which comes in 4 sections, is to be bolted to the edge of the angle iron at one end of the tank section. After this action is performed for each tank segment you may proceed as above in Step # 8.

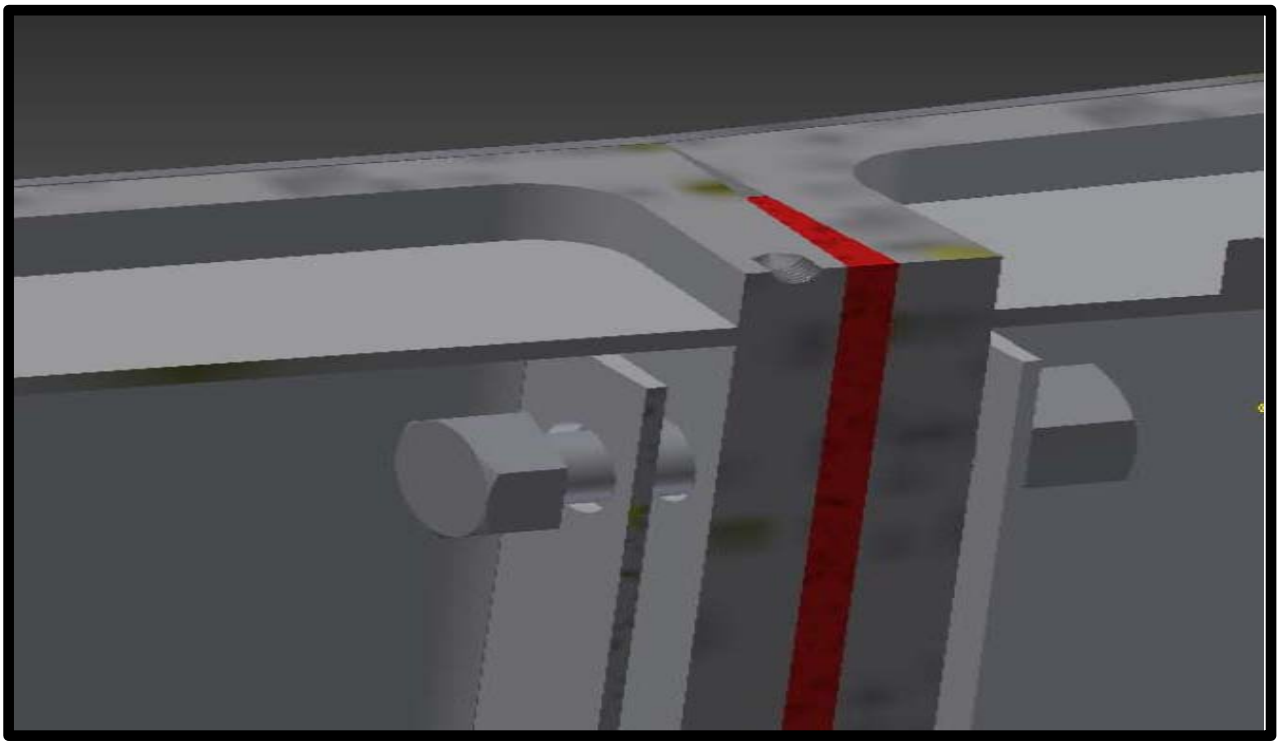

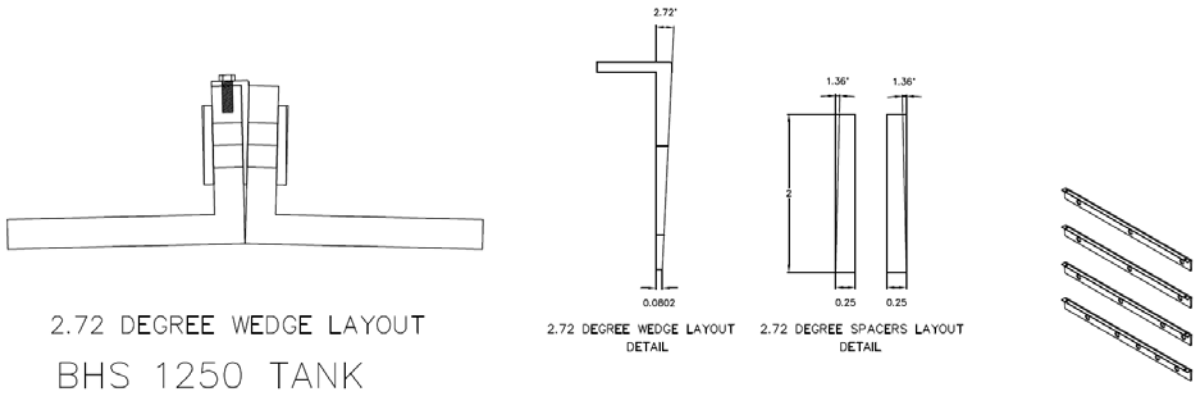

If installing BHS-1000 (which is only 10 segments) you will need to first have on hand Wedge Kit # BHS-1000 which is a 6.00 degree wedge. This wedge, which comes in 4 sections, is to be bolted to the edge of the angle iron at one end of the tank section. After this action is performed for each tank segment you may proceed as above in Step # 8.

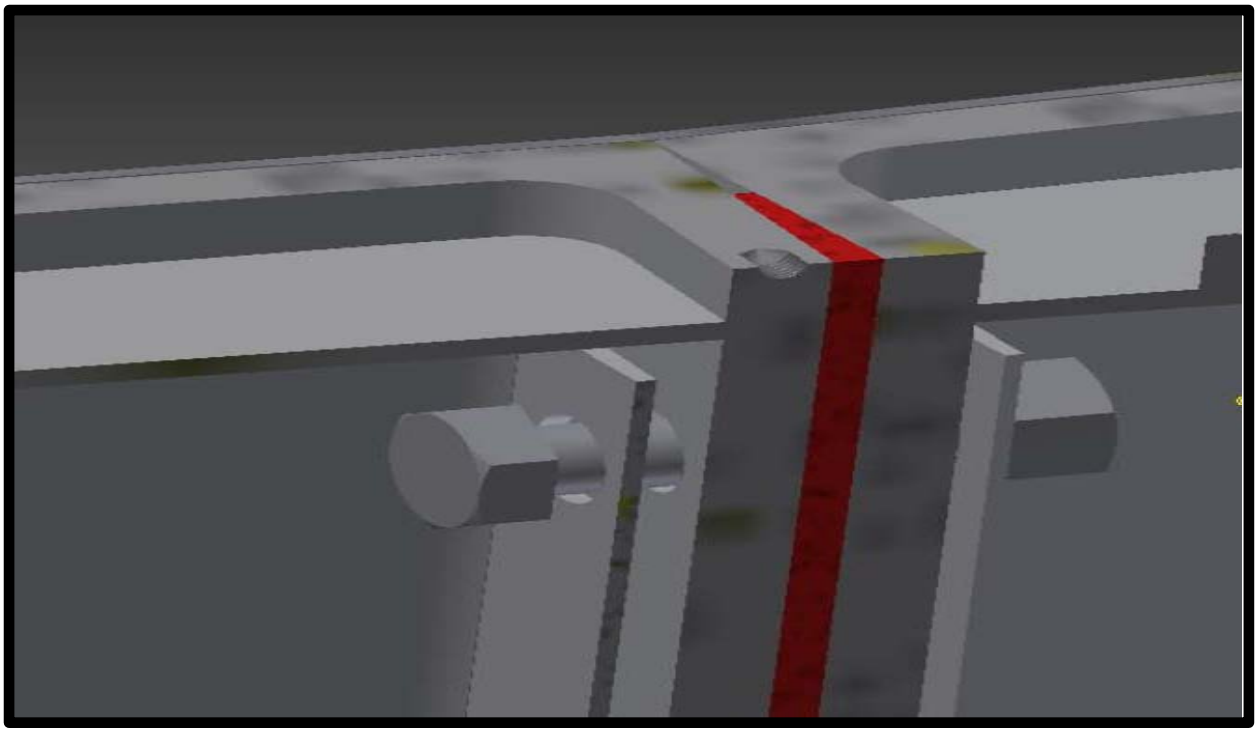

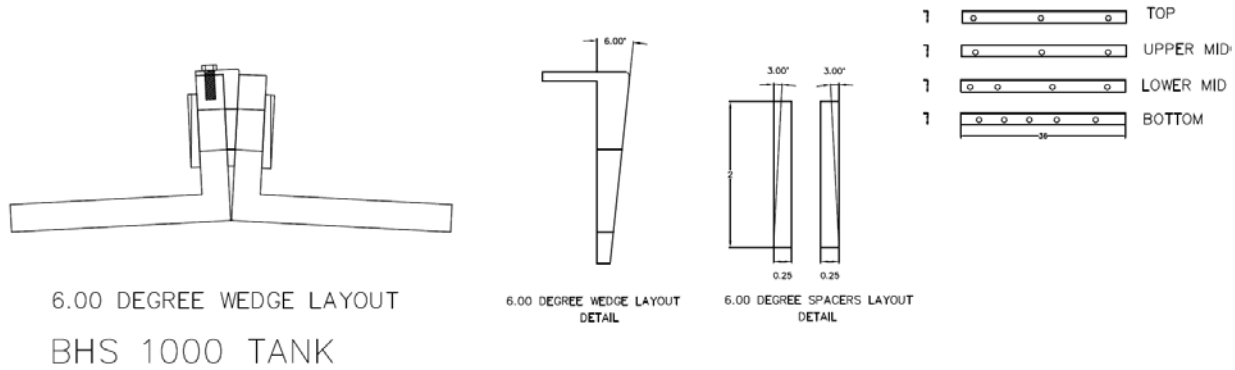

SCHEDULE # 2

SEGMENT INSTALLATION PROCESS FOR

GENERATION 3 BH-1500 TANK (12 SEGMENTS, 148 FT DIAMETER)

As reviewed in the Installation Manual, it is recommended that the circumference of the tank wall be spray painted on the geo-textile base before installation of the panel proceeds. This marking is an approximate reference for the tank; however, in order to efficiently install the panels and ensure that the last panel fits properly, we highly recommend that the installer use tape measures and the following procedure of measuring tank chords after every panel is installed. For the Generation 3 BH-1500 tanks (12 segments, each with a curved length of 38 ft. 9 inches), the following is the recommended procedure:

1. Select one of the two tank segments that will be used to support the "candy cane" fluid nozzle and level gauge indicator, and determine where on the perimeter of the tank this is to be located. Using canvas straps and lifting bar, lift and place this tank segment in the position desired for the nozzle orientation. Install the support jigs (2 external, 1 internal) on this segment while the segment is being held by the crane.

2. Select the 2nd tank segment that will not be used to support the "candy cane" fluid nozzle and install lifting straps and spreader bar. Lift and place this 2nd tank segment adjacent to the first tank segment. Install the support jigs (2 external, 1 internal). Adjust until the top and bottom bolts can be made up between the segments and adjust until all bolts can be made up. Check the position of

this 2nd tank segment initially with reference to the spray circumference marking and finally by measuring the distance from the ends of the 1st and 2nd segments, using the inside edge of the tank wall. The **distance (chord)** from the inside edge of the segments, measured at the base, **shall be <u>74 feet, 0 inches</u>**. Adjust accordingly.

3. Select the 3rd tank segment that will not be used to support the "candy cane" fluid nozzle and install lifting straps and spreader bar. Lift and place this 3rd tank segment adjacent to the 2nd tank segment. Install the support jigs (2 external, 1 internal). Adjust until the top and bottom bolts can be made up between the segments and adjust until all bolts can be made up. Check the position of this 3rd tank segment initially with reference to the spray circumference marking and finally by measuring the distance from the ends of the 1st and 3rd segments, using the inside edge of the tank wall. The **distance (chord)** from the inside edge of the segments, measured at the base, **shall be <u>104 feet, 7 ¾ inches</u>**. Adjust accordingly.

4. Select the 4th tank segment that will be used to support the "candy cane" fluid nozzle (if this is the plan for the tank) and install lifting straps and spreader bar. Lift and place this 4th tank segment adjacent to the 3rd tank segment. Install the support jigs (2 external, 1 internal). Adjust until the top and bottom bolts can be made up between the segments and adjust until all bolts can be made up. Check the position of this 4th tank segment initially with reference to the spray circumference marking and finally by measuring the distance from the ends of the 1st and 4th segments, using the inside edge of the tank wall. The **distance (chord)** from the inside edge of the segments, measured at the base, **shall be <u>128 feet, 2 inches</u>**. Adjust accordingly.

5. Select the 5th tank segment and install lifting straps and spreader bar. Lift and place this 5th tank segment adjacent to the 4th tank segment. Install the support jigs (2 external, 1 internal). Adjust until the top and bottom bolts can be made up between the segments and adjust until all bolts can be made up. Check the position of this 5th tank segment initially with reference to the spray circumference marking and finally by measuring the distance from the ends of the 1st and 5th segments, using the inside edge of the tank wall. The **distance (chord)** from the inside edge of the segments, measured at the base, **shall be <u>142 feet, 1 ½ inches</u>**. Adjust accordingly.

6. Select the 6th tank segment and install lifting straps and spreader bar. Lift and place this 6th tank segment adjacent to the 5th tank segment. Adjust until the top and bottom bolts can be made up between the segments and adjust until all bolts can be made up. Check the position of this 6th tank segment initially with reference to the spray circumference marking and finally by measuring the distance from the ends of the 1st and 6th segments, using the inside edge of the tank wall. The **distance (chord)** from the inside edge of the segments, measured at the base, **shall be <u>148 feet, 0 inches</u>**. Adjust accordingly.

7. Select the 7th tank segment and install lifting straps and spreader bar. Lift and place this 7th tank segment adjacent to the 6th tank segment. Adjust until the top and bottom bolts can be made up between the segments and adjust until all bolts can be made up. Check the position of this 7th tank segment initially with reference to the spray circumference marking and finally by measuring the distance from the ends of the 1st and 7th segments, using the inside edge of the tank wall. The **distance (chord)** from the inside edge of the segments, measured at the base, **shall be 142 feet, 1 ½ inches**. Adjust accordingly.

8. Select the 8th tank segment and install lifting straps and spreader bar. Lift and place this 8th tank segment adjacent to the 7th tank segment. Adjust until the top and bottom bolts can be made up between the segments and adjust until all bolts can be made up. Check the position of this 8th tank segment initially with reference to the spray circumference marking and finally by measuring the distance from the ends of the 1st and 8th segments, using the inside edge of the tank wall. The **distance (chord)** from the inside edge of the segments, measured at the base, **shall be 128 feet, 2 inches**. Adjust accordingly.

9. Select the 9th tank segment and install lifting straps and spreader bar. Lift and place this 9th tank segment adjacent to the 8th tank segment. Adjust until the top and bottom bolts can be made up between the segments and adjust until all bolts can be made up. Check the position of this 9th tank segment initially with reference to the spray circumference marking and finally by measuring the distance from the ends of the 1st and 9th segments, using the inside edge of the tank wall. The **distance (chord)** from the inside edge of the segments, measured at the base, **shall be 104 feet, 7 ¾ inches**. Adjust accordingly.

10. Select the 10th tank segment and install lifting straps and spreader bar. Lift and place this 10th tank segment adjacent to the 9th tank segment. Adjust until the top and bottom bolts can be made up between the segments and adjust until all bolts can be made up. Check the position of this 10th tank segment initially with reference to the spray circumference marking and finally by measuring the distance from the ends of the 1st and 10th segments, using the inside edge of the tank wall. The **distance (chord)** from the inside edge of the segments, measured at the base, **shall be 74 feet, 0 inches**. Adjust accordingly.

11. Select the 11th tank segment and install lifting straps and spreader bar. Lift and place this 11th tank segment adjacent to the 10th tank segment. Adjust until the top and bottom bolts can be made up between the segments and adjust until all bolts can be made up. Check the position of this 11th tank segment initially with reference to the spray circumference marking and finally by measuring the distance from the ends of the 1st and 11th segments, using the inside edge of the tank wall. The

distance (chord) from the inside edge of the segments, measured at the base, **shall be <u>38 feet, 3 5/8 inches</u>**. Adjust accordingly.

12. Select the 12th tank segment and install lifting straps and spreader bar. Lift and place this 12th tank segment adjacent to the 11th tank segment. Adjust until the top and bottom bolts can be made up between all segments and adjust until all bolts can be made up.

SCHEDULE # 3

SEGMENT INSTALLATION PROCESS FOR

GENERATION 3 BH-1250 TANK (11 SEGMENTS, 135.7 FT. DIAMETER)

As reviewed in the Installation Manual, it is recommended that the circumference of the tank wall be spray painted on the geo-textile base before installation of the panel proceeds. This marking is an approximate reference for the tank, however, in order to efficiently install the panels and ensure that the last panel fits properly, we highly recommend that the installer use tape measures and the following procedure of measuring tank chords after every panel is installed. For the Generation 3 BH-1250 tanks (11 segments, each with a curved length of 38 ft. 9 inches), the following is the recommended procedure:

1. Select one of the two tank segments that will be used to support the "candy cane" fluid nozzle and level gauge indicator, and determine where on the perimeter of the tank this is to be located. Using canvas straps and lifting bar, lift and place this tank segment in the position desired for the nozzle orientation. Install the support jigs (2 external, 1 internal) on this segment while the segment is being held by the crane.

2. Select the 2nd tank segment that will not be used to support the "candy cane" fluid nozzle and install wedge kit (2.7 degree, 2 pieces), lifting straps and spreader bar. Lift and place this 2nd tank segment adjacent to the first tank segment. Install the support jigs (2 external, 1 internal). Adjust

until the top and bottom bolts can be made up between the segments and adjust until all bolts can be made up. Check the position of this 2nd tank segment initially with reference to the spray circumference marking and finally by measuring the distance from the ends of the 1st and 2nd segments, using the inside edge of the tank wall. The **distance (chord)** from the inside edge of the segments, measured at the base, **shall be 73 feet, 4 3/8 inches**. Adjust accordingly.

3. Select the 3rd tank segment that will not be used to support the "candy cane" fluid nozzle and install wedge kit (2.7 degree, 2 pieces), lifting straps and spreader bar. Lift and place this 3rd tank segment adjacent to the 2nd tank segment. Install the support jigs (2 external, 1 internal). Adjust until the top and bottom bolts can be made up between the segments and adjust until all bolts can be made up. Check the position of this 3rd tank segment initially with reference to the spray circumference marking and finally by measuring the distance from the ends of the 1st and 3rd segments, using the inside edge of the tank wall. The **distance (chord)** from the inside edge of the segments, measured at the base, **shall be 102 feet, 6 5/8 inches**. Adjust accordingly.

4. Select the 4th tank segment that will be used to support the "candy cane" fluid nozzle (if this is the plan for the tank) and install wedge kit (2.7 degree, 2 pieces), lifting straps and spreader bar. Lift and place this 4th tank segment adjacent to the 3rd tank segment. Install the support jigs (2 external, 1 internal). Adjust until the top and bottom bolts can be made up between the segments and adjust until all bolts can be made up. Check the position of this 4th tank segment initially with reference to the spray circumference marking and finally by measuring the distance from the ends of the 1st and 4th segments, using the inside edge of the tank wall. The **distance (chord)** from the inside edge of the segments, measured at the base, **shall be 123 feet, 5 inches**. Adjust accordingly.

5. Select the 5th tank segment and install wedge kit (2.7 degree, 2 pieces), lifting straps and spreader bar. Lift and place this 5th tank segment adjacent to the 4th tank segment. Install the support jigs (2 external, 1 internal). Adjust until the top and bottom bolts can be made up between the segments and adjust until all bolts can be made up. Check the position of this 5th tank segment initially with reference to the spray circumference marking and finally by measuring the distance from the ends of the 1st and 5th segments, using the inside edge of the tank wall. The **distance (chord)** from the inside edge of the segments, measured at the base, **shall be 134 feet, 3 5/8 inches**. Adjust accordingly.

6. Select the 6th tank segment and install wedge kit (2.7 degree, 2 pieces), lifting straps and spreader bar. Lift and place this 6th tank segment adjacent to the 5th tank segment. Adjust until the top and bottom bolts can be made up between the segments and adjust until all bolts can be made up. Check the position of this 6th tank segment initially with reference to the spray circumference

marking and finally by measuring the distance from the ends of the 1st and 6th segments, using the inside edge of the tank wall. The **distance (chord)** from the inside edge of the segments, measured at the base, **shall be 134 feet, 3 5/8 inches**. Adjust accordingly.

7. Select the 7th tank segment and install wedge kit (2.7 degree, 2 pieces), lifting straps and spreader bar. Lift and place this 7th tank segment adjacent to the 6th tank segment. Adjust until the top and bottom bolts can be made up between the segments and adjust until all bolts can be made up. Check the position of this 7th tank segment initially with reference to the spray circumference marking and finally by measuring the distance from the ends of the 1st and 7th segments, using the inside edge of the tank wall. The **distance (chord)** from the inside edge of the segments, measured at the base, **shall be 123 feet, 5 inches**. Adjust accordingly.

8. Select the 8th tank segment and install wedge kit (2.7 degree, 2 pieces), lifting straps and spreader bar. Lift and place this 8th tank segment adjacent to the 7th tank segment. Adjust until the top and bottom bolts can be made up between the segments and adjust until all bolts can be made up. Check the position of this 8th tank segment initially with reference to the spray circumference marking and finally by measuring the distance from the ends of the 1st and 8th segments, using the inside edge of the tank wall. The **distance (chord)** from the inside edge of the segments, measured at the base, **shall be 102 feet, 6 5/8 inches**. Adjust accordingly.

9. Select the 9th tank segment and install wedge kit (2.7 degree, 2 pieces), lifting straps and spreader bar. Lift and place this 9th tank segment adjacent to the 8th tank segment. Adjust until the top and bottom bolts can be made up between the segments and adjust until all bolts can be made up. Check the position of this 9th tank segment initially with reference to the spray circumference marking and finally by measuring the distance from the ends of the 1st and 9th segments, using the inside edge of the tank wall. The **distance (chord)** from the inside edge of the segments, measured at the base, **shall be 73 feet, 4 3/8 inches**. Adjust accordingly.

10. Select the 10th tank segment and install wedge kit (2.7 degree, 2 pieces), lifting straps and spreader bar. Lift and place this 10th tank segment adjacent to the 9th tank segment. Adjust until the top and bottom bolts can be made up between the segments and adjust until all bolts can be made up. Check the position of this 10th tank segment initially with reference to the spray circumference marking and finally by measuring the distance from the ends of the 1st and 10th segments, using the inside edge of the tank wall. The **distance (chord)** from the inside edge of the segments, measured at the base, **shall be 38 feet, 4 inches**. Adjust accordingly.

11. Select the 11th tank segment and install wedge kit (2.7 degree, 2 pieces), lifting straps and spreader bar. Lift and place this 11th tank segment adjacent to the 10th tank segment. Adjust until the top and bottom bolts can be made up between all segments and adjust until all bolts can be made up.

SCHEDULE # 4

SEGMENT INSTALLATION PROCESS FOR

GENERATION 3 BH-1000 TANK (10 SEGMENTS, 123.4 FT. DIAMETER)

As reviewed in the Installation Manual, it is recommended that the circumference of the tank wall be spray painted on the geo-textile base before installation of the panel proceeds. This marking is an approximate reference for the tank, however, in order to efficiently install the panels and ensure that the last panel fits properly, we highly recommend that the installer use tape measures and the following procedure of measuring tank chords after every panel is installed. For the Generation 3 BH-1000 tanks (10 segments, each with a curved length of 38 ft. 9 inches), the following is the recommended procedure:

1. Select one of the two tank segments that will be used to support the "candy cane" fluid nozzle and level gauge indicator, and determine where on the perimeter of the tank this is to be located. Using canvas straps and lifting bar, lift and place this tank segment in the position desired for the nozzle orientation. Install the support jigs (2 external, 1 internal) on this segment while the segment is being held by the crane.

2. Select the 2nd tank segment that will not be used to support the "candy cane" fluid nozzle and install wedge kit (6.0 degree, 2 pieces), lifting straps and spreader bar. Lift and place this 2nd tank segment adjacent to the first tank segment. Install the support jigs (2 external, 1 internal). Adjust

until the top and bottom bolts can be made up between the segments and adjust until all bolts can be made up. Check the position of this 2nd tank segment initially with reference to the spray circumference marking and finally by measuring the distance from the ends of the 1st and 2nd segments, using the inside edge of the tank wall. The **distance (chord)** from the inside edge of the segments, measured at the base, **shall be 72 feet, 6 inches**. Adjust accordingly.

3. Select the 3rd tank segment that will not be used to support the "candy cane" fluid nozzle and install wedge kit (6.0 degree, 2 pieces), lifting straps and spreader bar. Lift and place this 3rd tank segment adjacent to the 2nd tank segment. Install the support jigs (2 external, 1 internal). Adjust until the top and bottom bolts can be made up between the segments and adjust until all bolts can be made up. Check the position of this 3rd tank segment initially with reference to the spray circumference marking and finally by measuring the distance from the ends of the 1st and 3rd segments, using the inside edge of the tank wall. The **distance (chord)** from the inside edge of the segments, measured at the base, **shall be 99 feet, 9 3/8 inches**. Adjust accordingly.

4. Select the 4th tank segment that will be used to support the "candy cane" fluid nozzle (if this is the plan for the tank) and install wedge kit (6.0 degree, 2 pieces), lifting straps and spreader bar. Lift and place this 4th tank segment adjacent to the 3rd tank segment. Install the support jigs (2 external, 1 internal). Adjust until the top and bottom bolts can be made up between the segments and adjust until all bolts can be made up. Check the position of this 4th tank segment initially with reference to the spray circumference marking and finally by measuring the distance from the ends of the 1st and 4th segments, using the inside edge of the tank wall. The **distance (chord)** from the inside edge of the segments, measured at the base, **shall be 117 feet, 3 5/8 inches**. Adjust accordingly.

5. Select the 5th tank segment and install wedge kit (6.0 degree, 2 pieces), lifting straps and spreader bar. Lift and place this 5th tank segment adjacent to the 4th tank segment. Install the support jigs (2 external, 1 internal). Adjust until the top and bottom bolts can be made up between the segments and adjust until all bolts can be made up. Check the position of this 5th tank segment initially with reference to the spray circumference marking and finally by measuring the distance from the ends of the 1st and 5th segments, using the inside edge of the tank wall. The **distance (chord)** from the inside edge of the segments, measured at the base, **shall be 123 feet, 4 inches**. Adjust accordingly.

6. Select the 6th tank segment and install wedge kit (6.0 degree, 2 pieces), lifting straps and spreader bar. Lift and place this 6th tank segment adjacent to the 5th tank segment. Adjust until the top and bottom bolts can be made up between the segments and adjust until all bolts can be made up. Check the position of this 6th tank segment initially with reference to the spray circumference

marking and finally by measuring the distance from the ends of the 1st and 6th segments, using the inside edge of the tank wall. The **distance (chord)** from the inside edge of the segments, measured at the base, **shall be 117 feet, 3 5/8 inches**. Adjust accordingly.

7. Select the 7th tank segment and install wedge kit (6.0 degree, 2 pieces), lifting straps and spreader bar. Lift and place this 7th tank segment adjacent to the 6th tank segment. Adjust until the top and bottom bolts can be made up between the segments and adjust until all bolts can be made up. Check the position of this 7th tank segment initially with reference to the spray circumference marking and finally by measuring the distance from the ends of the 1st and 7th segments, using the inside edge of the tank wall. The **distance (chord)** from the inside edge of the segments, measured at the base, **shall be 99 feet, 9 3/8 inches**. Adjust accordingly.

8. Select the 8th tank segment and install wedge kit (6.0 degree, 2 pieces), lifting straps and spreader bar. Lift and place this 8th tank segment adjacent to the 7th tank segment. Adjust until the top and bottom bolts can be made up between the segments and adjust until all bolts can be made up. Check the position of this 8th tank segment initially with reference to the spray circumference marking and finally by measuring the distance from the ends of the 1st and 8th segments, using the inside edge of the tank wall. The **distance (chord)** from the inside edge of the segments, measured at the base, **shall be 72 feet, 6 inches**. Adjust accordingly.

9. Select the 9th tank segment and install wedge kit (6.0 degree, 2 pieces), lifting straps and spreader bar. Lift and place this 9th tank segment adjacent to the 8th tank segment. Adjust until the top and bottom bolts can be made up between the segments and adjust until all bolts can be made up. Check the position of this 9th tank segment initially with reference to the spray circumference marking and finally by measuring the distance from the ends of the 1st and 9th segments, using the inside edge of the tank wall. The **distance (chord)** from the inside edge of the segments, measured at the base, **shall be 38 feet, 3 5/8 inches**. Adjust accordingly.

10. Select the 10th tank segment and install wedge kit (2.7 degree, 2 pieces), lifting straps and spreader bar. Lift and place this 11th tank segment adjacent to the 10th tank segment. Adjust until the top and bottom bolts can be made up between all segments and adjust until all bolts can be made up.