02222736

FORM 15 Rev 6/99

State of Colorado
Oil and Gas Conservation Commission

1120 Lincoln Street, Suite 801, Denver, Colorado 80203 (303)894-2100 Fax:(303)894-2109

FOR OGCC USE ONLY
RECEIVED
JAN 20 2012
COGCC

EARTHEN PIT REPORT/PERMIT

This form is to be used for both reporting and permitting pits. Rule 903 describes when a Permit with prior approval, or a Report within 30 days, is required for pits. Submit required attachments and forms.

Complete the Attachment Checklist

	Oper	OGCC
Detailed Site Plan	✓	
Topo Map w/ Pit Location	✓	
Water Analysis (Form 25)	✓	
Source Wells (Form 26)	✓	
Pit Design/Plan & Cross Sect	✓	
Design Calculations	✓	
Sensitive Area Determ.		
Mud Program		
Form 2A	✓	

FORM SUBMITTED FOR:

☐ Pit Report ☑ Pit Permit

OGCC Operator Number: 100185
Name of Operator: Encana Oil & Gas (USA) Inc.
Address: 370 17th Street, Suite 1700
City: Denver State: CO Zip: 80202

Contact Name and Telephone:
Heather Mitchell
No: 720-876-3070
Fax: 720-876-4070

API Number (of associated well): N/A OGCC Facility ID (of other associated facility): 335800
Pit Location (QtrQtr, Sec, Twp, Rng, Meridian): NENE Sec. 15, T5S, R96W 6 PM 2A # 400230807
Latitude: 39.62179 Longitude: 108.148867 County: Garfield
Pit Use: ☑ Production ☐ Drilling (Attach mud program) ☐ Special Purpose (Describe Use): MULTI-WELL
Pit Type: ☑ Lined ☐ Unlined Surface Discharge Permit: ☐ Yes ☐ No
Offsite disposal of pit contents: ☐ Injection ☐ Commercial Pit/Facility Name: WEST FORK Pit/Facility No: A-15 576
Attach Form 26 to identify Source Wells and Form 25 to provide Produced Water Analysis results.

Existing Site Conditions

Is the location in a "Sensitive Area?" ☑ Yes ☐ No **Attach data used for determination.**
Distance (in feet) to nearest surface water: ~177 ground water: 30 water wells: ~1204
LAND USE (or attach copy of Form 2A if previously submitted for associated well) Select one which best describes land use:
Crop Land: ☐ Irrigated ☐ Dry Land ☐ Improved Pasture ☐ Hay Meadow ☐ CRP
Non-Crop Land: ☑ Rangeland ☐ Timber ☐ Recreational ☐ Other (describe):
Subdivided: ☐ Industrial ☐ Commercial ☐ Residential
SOILS (or attach copy of Form 2A if previously submitted for associated well)
Soil map units form USNRCS survey: Sheet No: Soil Complex/Series No: 53
Soils Series Name: Rockoutcrop torriorthents complex Horizon thickness (in inches): A: ; B: ; C:
Soils Series Name: Horizon thickness (in inches): A: ; B: ; C:
Attach detailed site plan and topo map with pit location.

Pit Design and Construction

Size of pit (feet): Length: 404' Width: 84' Depth: 19'
Calculated pit volume (bbls): ~48000 Daily inflow rate (bbls/day): n/a
Daily disposal rates (attach calculations): Evaporation: natural bbls/day Percolation: n/a bbls/day
Type of liner material: HDPE/Secondary GCL liner Thickness: 60 mil
Attach description of proposed design and construction (include sketches and calculations).
Method of treatment of produced water prior to discharge into pit (separator, heater treater, other): mechanical settling/separating
Is pit fenced? ☑ Yes ☐ No Is pit netted? ☑ Yes ☐ No

I hereby certify that the statements made in this form are, to the best of my knowledge, true, correct, and complete.
Print Name: Heather Mitchell Signed: [signature]
Title: Regulatory Analyst Date: 1.19.2012

OGCC Approved: David Kubisz Title: Location Assessment Specialist Date: 3-7-12

CONDITIONS OF APPROVAL, IF ANY:

See Attached Sheet

FACILITY NUMBER:

Scan No. 2034165 **Form 15 Pit Permit** **Form 2A#400230807**

EnCana Oil & Gas (USA), N. Parachute WF A15 596 Pad and Pit, NENE Sec 15 T5S R96W, Garfield County, Form 2A#400230807, Form 15 Pit Permit Conditions of Approval

COA 11 - Prior to multi-well pit construction, a Form 27 (Remediation Workplan/Closure Report) must be submitted via a Form 4 Sundry to the COGCC detailing the closure of the original drilling pits (#425199 and #425200) at this well pad location. This form should include the dates of closure, where the fluids were disposed of, and where any impacted soil was disposed of. In addition, analytical results from soil samples collected below the pit prior to the construction of the new multi-well pit, should also be included. **(Form 27 Received on March 2, 2012 [REM#6138])**

COA 90 - Notify COGCC Oil and Gas Location Assessment (OGLA) Specialist for Western Colorado (Dave Kubeczko; email dave.kubeczko@state.co.us) and the COGCC Field Inspection Supervisor for Northwest Colorado (Shaun Kellerby; email shaun.kellerby@state.co.us) 48 hours prior to start of construction of the pit.

COA 21 - Surface water samples from West Fork (one upstream and one downstream of the well pad/pit location) shall be collected by the operator prior to pit use and every 12 months to evaluate potential impacts from pit operations. At a minimum, the surface water samples will be analyze for the following parameters: major cations/anions (chloride, fluoride, sulfate, sodium); total dissolved solids (TDS); and BTEX/DRO.

COA 22 - After installation of the uppermost liner and prior to operating the pit, the synthetic liner(s) shall be tested by filling the pit with at least 4 feet of fresh water, measured from the base of the pit (not to exceed the 2-foot freeboard requirement). The operator shall monitor the pit for leaks for a period of 72 hours prior to draining the pit and commencing operations. Operator shall notify the COGCC Oil and Gas Location Assessment (OGLA) Specialist for Western Colorado (Dave Kubeczko; email dave.kubeczko@state.co.us) 48 hours prior to start of the hydrotest. Hydrotest monitoring results must be maintained by the operator for the life of the pit and provided to COGCC prior to using the pit.

COA 23 - Operator must ensure 110 percent secondary containment for any volume of fluids contained at the water handling facility site during natural gas development activities and operations; including, but not limited to, construction of a berm or diversion dike, diversion/collection trenches within and/or outside of berms/dikes, site grading, or other comparable measures (i.e., best management practices (BMPs) associated with stormwater management) sufficiently protective of nearby surface water. Any berm constructed at the well pad location will be stabilized, inspected at regular intervals (at least every 14 days), and maintained in good condition.

COA 5 - Operator must implement best management practices to contain any unintentional release of fluids, including any fluids conveyed via buried or temporary surface pipelines.

COA 39 - No portion of any pit that will be used to hold liquids shall be constructed on fill material, unless the pit and fill slope are designed and certified by a professional engineer, subject to review and approval by the director prior to construction of the pit. The construction and lining of the pit shall be supervised by a professional engineer or their agent. The entire base of the pit must be in cut.

COA 47 - The production pit must be double-lined. The pit will also require a leak detection system (Rule 904.e).

COA 48 - Operator must submit a professional engineer (PE) approved/stamped as-built drawing (plan view and cross-sections) of the production pit within 14 calendar days of construction.

COA 49 - The production pit must be fenced and netted. The operator must maintain the fencing and netting until the pit is closed in accordance with Rule 905. Closure of Pits, and Buried or Partially Buried Produced Water Vessels.

COA 11 - Operator shall pressure test pipelines in accordance with Rule 1101.e.(1) prior to putting into initial service any
temporary surface pipelines or configuration of the permanent pipeline network.

COA 27 - Submit additional disposal facilities (wells, pits, landfills, etc.) for pit contents, if different than what was provided on the Form 15 Pit Permit, to COGCC via a Form 4 Sundry prior to disposal.

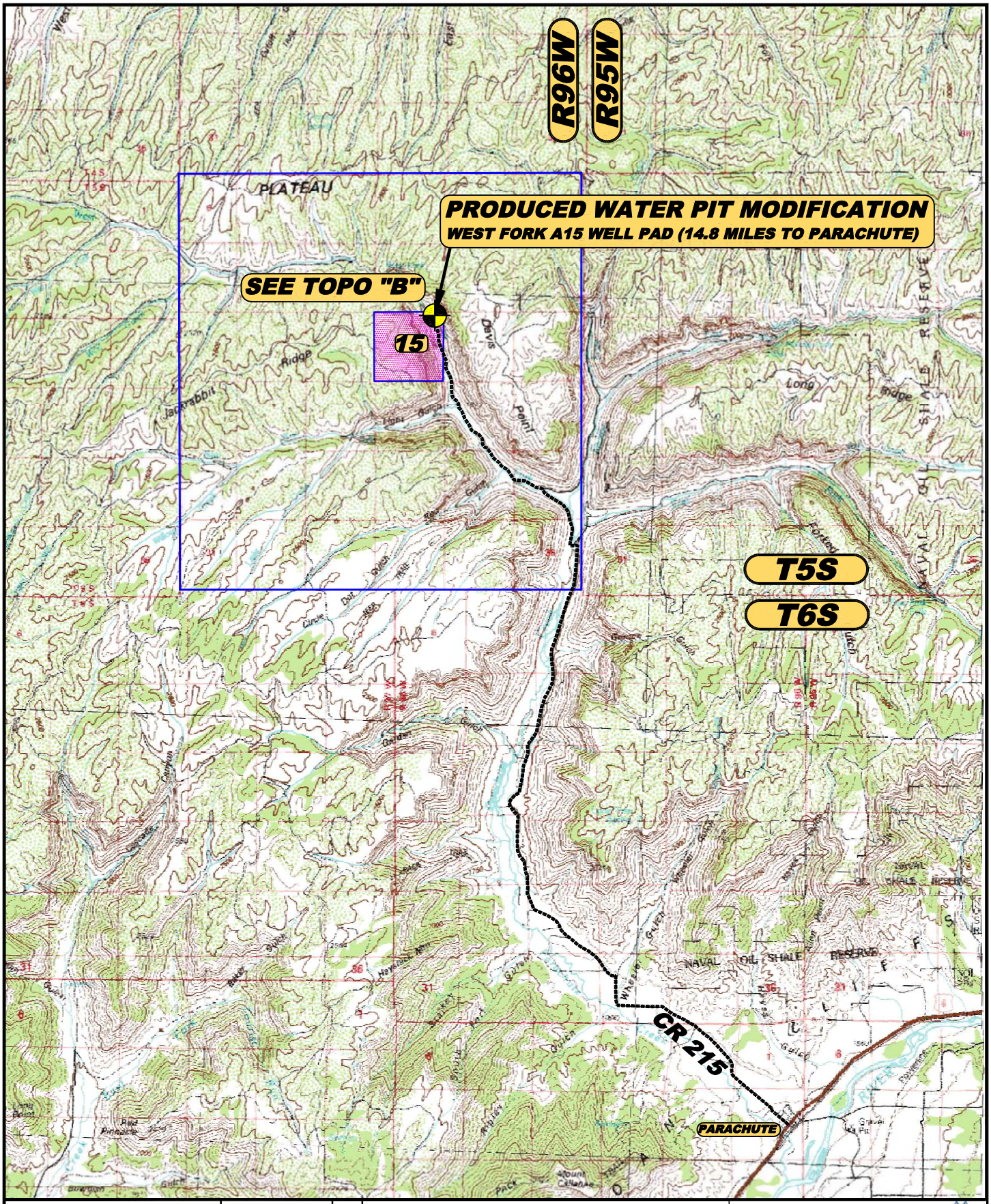

encana natural gas

LEGEND:

WELL PAD LOCATION

30X60 MIN. QUAD: DOUGLAS PASS, CO.

N

TOPOGRAPHIC MAP "A"

WEST FORK A15 WELL PAD

NE-NE, SEC. 15, T5S, R96W, 6TH P.M.

GARFIELD COUNTY, COLORADO

SCALE: 1"=10000'	DRAWN BY: BEC	DATE: 08/12/11	REVISED:

UniversalPegasus INTERNATIONAL

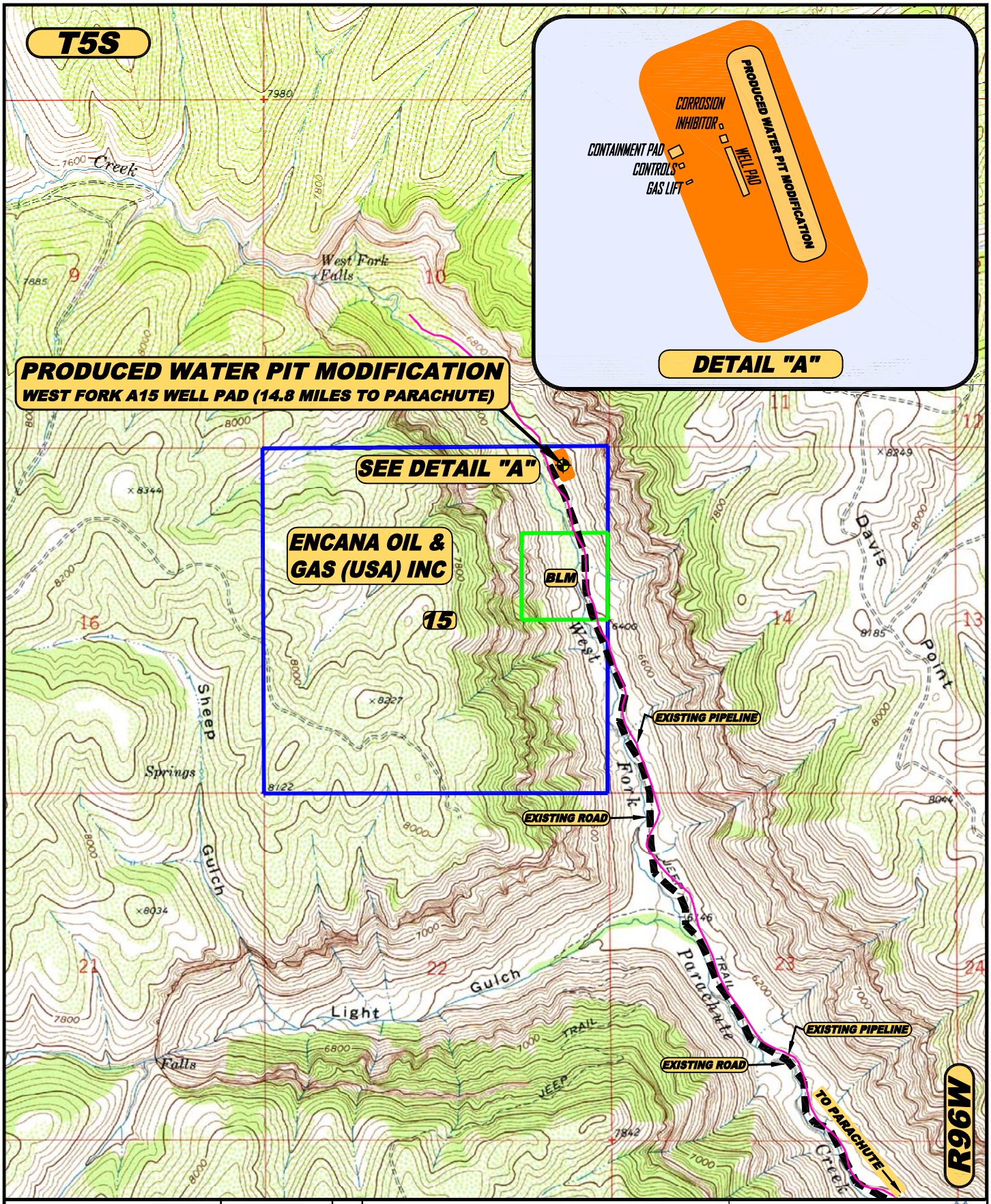

encana natural gas

LEGEND:
WELL PAD LOCATION

7.5 MIN. QUAD:
CIRCLE DOT GULCH
CUTOFF GULCH

N

TOPOGRAPHIC MAP "B"
WEST FORK A15 WELL PAD
NE-NE, SEC. 15, T5S, R96W, 6TH P.M.
GARFIELD COUNTY, COLORADO

SCALE: 1"=2000'	DRAWN BY: BEC	DATE: 08/12/11	REVISED:

UniversalPegasus INTERNATIONAL

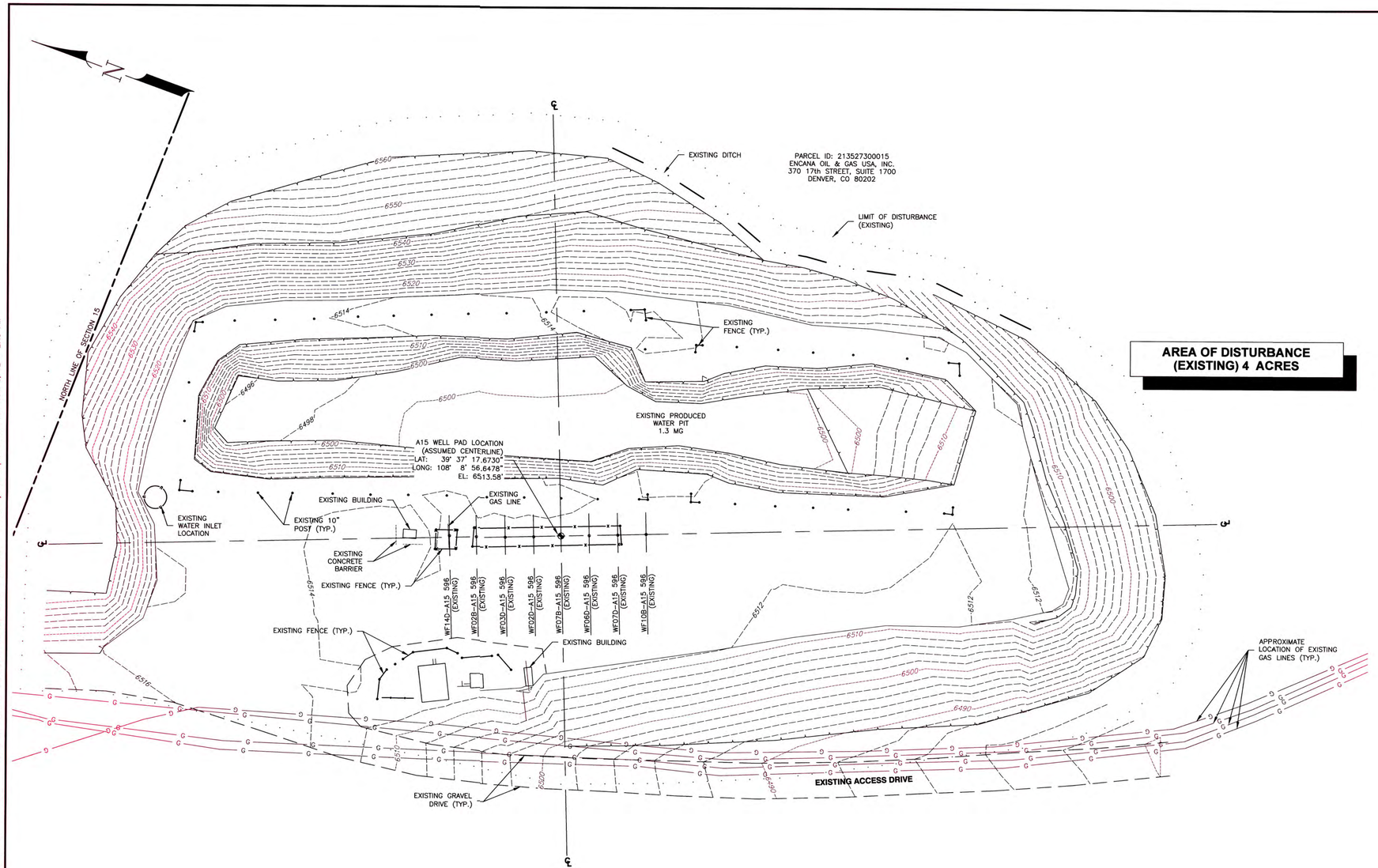

AREA OF DISTURBANCE (EXISTING) 4 ACRES

LEGEND

- EXISTING SECTION LINE
- EXISTING MUNICIPAL BOUNDARY
- EXISTING UNPAVED ROAD
- EXISTING INDEX CONTOUR
- EXISTING INTERMEDIATE CONTOUR
- EXISTING TOP OF SLOPE
- EXISTING BOTTOM OF SLOPE
- EXISTING GAS PIPELINE
- EXISTING GAS WELL
- EXISTING PIPE BOLLARD
- EXISTING FENCE
- EXISTING BUILDING
- EXISTING CENTERLINE OF DITCH
- WELL PAD CENTERLINE LOCATION
- PROPOSED LIMIT OF DISTURBANCE

NOTES:

1. SITE FEATURES AND TOPOGRAPHY WAS SURVEYED BY UNIVERSALPEGASUS INTERNATIONAL ON 7/21/11.
2. SURVEY BENCHMARK AND SURVEY CONTROL SHOULD BE ESTABLISHED BY THE CONTRACTOR FOR PIT LOCATION, DEPTH AND SLOPE LIMITS, PRIOR TO COMMENCING EXCAVATION ACTIVITIES.
3. PRIOR TO ANY EXCAVATION WORK ON A PAD THAT HAS PIPELINES, THE PIPELINE SHALL BE PREPPED FOR CONSTRUCTION. PIPELINE SHALL BE LOCKED-OUT/TAGGED OUT, PURGED, WATER TESTED AND OPEN TO ATMOSPHERE.
4. ONE-CALL SHALL BE MADE IN ACCORDANCE WITH COLORADO STATE LAW. AFTER ALL PIPES HAVE BEEN HORIZONTAL LOCATED, DEPTH OF PIPES MUST BE DETERMINED WHEN PIPELINES ARE WITHIN TWO FEET OF EXCAVATION. THIS SHALL BE DONE BY DIGGING 6' DOWN ON EITHER SIDE OF THE PIPE AND SLOUGHING OFF THE MATERIAL BY HAND TO LOCATE THE PIPE. WHERE SPACE IS CONFINED, POT-HOLING SHALL BE USED TO LOCATE THE PIPE.
5. PIT VOLUME SHOWN ON PLANS IS MEASURED FROM WATER SURFACE ELEVATION TO BOTTOM OF PIT AND EXCLUDES THE 2' FREEBOARD VOLUME.
6. WELL PAD LOCATION WAS ASSUMED AND DOES NOT COINCIDE WITH EXISTING WELL HEAD LOCATIONS.
7. HORIZONTAL DATUM=NAD 83
   HORIZONTAL PROJECTION=COLORADO CENTRAL ZONE
   VERTICAL DATUM=NAVD88 (GEOID 03)
   U.S. SURVEY FEET (GRID)
   COMBINED SCALE FACTOR=0.99966821
   PDOP=1.28.

COLORADO LICENSED GLENN D. BANCROFT 41839 PROFESSIONAL ENGINEER 1/9/12

811 Know what's below. Call before you dig.

SCALE IN FEET 0 30 60

ISSUED FOR CONSTRUCTION
01/05/12

REF. DWG. NO.	REFERENCE TITLE	NO	REVISION	DATE	DRAWN	CHKD

NO	REVISION	DATE	DRAWN	CHKD
0	ISSUED FOR CONSTRUCTION	01/05/12	CLL	GDB

UniversalPegasus INTERNATIONAL
428 East 6400 South Suite 200 Salt Lake City, Utah 84107

DRAWN	SWH	DATE	09/01/11
CHECKED	GDB	DATE	11/15/11
APPROVED	GDB	DATE	11/18/11
SCALE	1"=30'-0"	SHEET	1 OF 1
JOB NO.	18675		
CLIENT	ENCANA NATURAL GAS		
CLIENT JOB NO.	--		

CIVIL/STRUCTURAL

WEST FORK PARACHUTE CREEK - A15 WELL PAD
PRODUCED WATER PIT
TOPOGRAPHIC PROPERTY PLAN

T5S R96W — GARFIELD COUNTY, COLORADO

encana natural gas

DRAWING NO. 18675-520-SIT-32201 — REV. 0

File Path S:\ActiveProjects\Encana\West Fork A15 Well Pad\20 - CAD\CIVIL\18675-520-SIT-32201.dwg Saved by: CHRISTOPHER.LARSON on: Jan. 5, 12 - 2:48 PM Plotted by: christopher larson on: Jan. 5, 12 - 2:49 PM

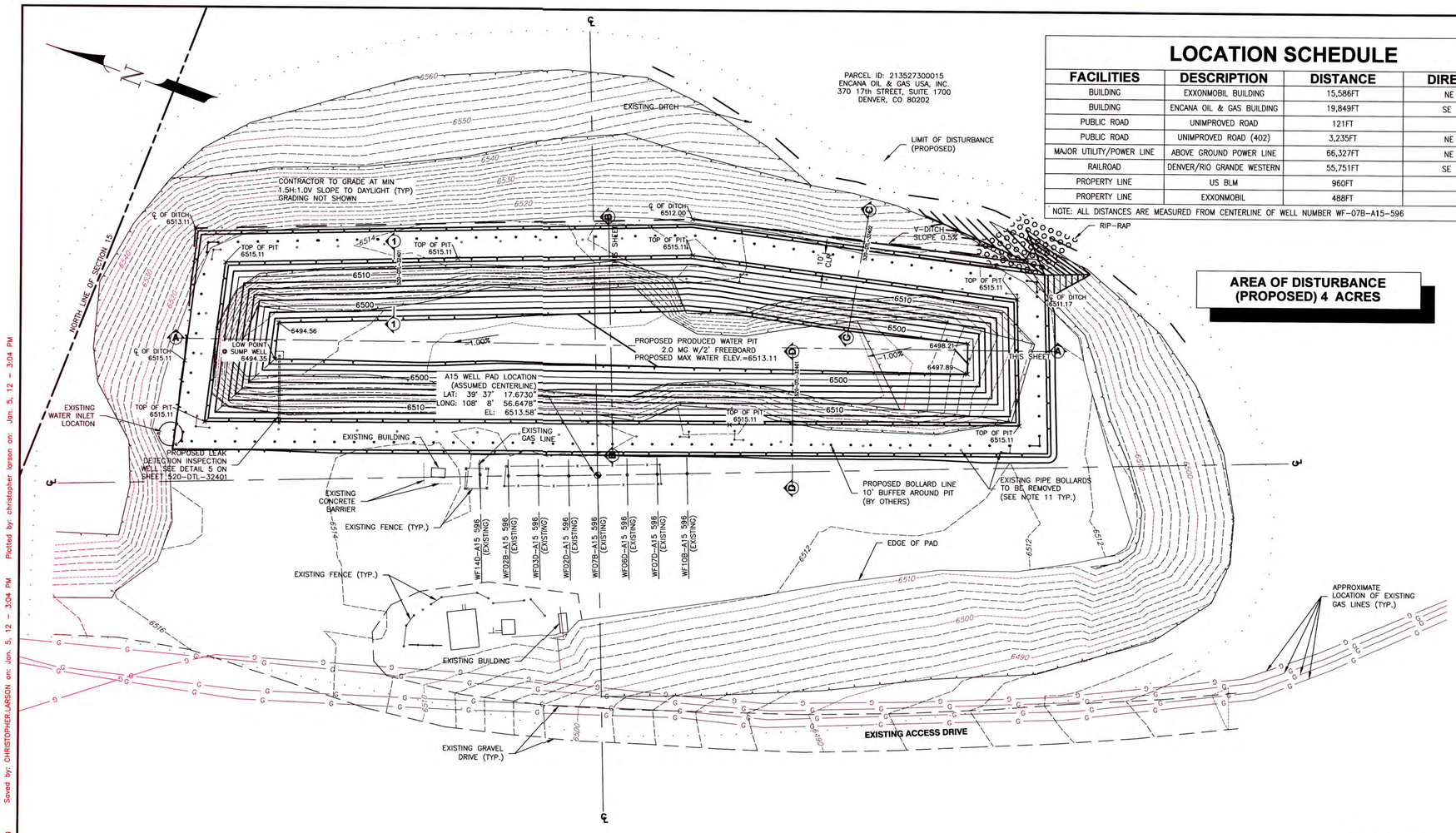

LOCATION SCHEDULE

FACILITIES	DESCRIPTION	DISTANCE	DIRECTION
BUILDING	EXXONMOBIL BUILDING	15,586FT	NE 45.9°
BUILDING	ENCANA OIL & GAS BUILDING	19,849FT	SE 142.1°
PUBLIC ROAD	UNIMPROVED ROAD	121FT	W
PUBLIC ROAD	UNIMPROVED ROAD (402)	3,235FT	NE 62.5°
MAJOR UTILITY/POWER LINE	ABOVE GROUND POWER LINE	66,327FT	NE 68.4°
RAILROAD	DENVER/RIO GRANDE WESTERN	55,751FT	SE 165.2°
PROPERTY LINE	US BLM	960FT	S
PROPERTY LINE	EXXONMOBIL	488FT	E

NOTE: ALL DISTANCES ARE MEASURED FROM CENTERLINE OF WELL NUMBER WF-07B-A15-596

AREA OF DISTURBANCE (PROPOSED) 4 ACRES

LEGEND

- EXISTING SECTION LINE
- EXISTING MUNICIPAL BOUNDARY
- EXISTING UNPAVED ROAD
- 1530 EXISTING INDEX CONTOUR
- EXISTING INTERMEDIATE CONTOUR
- EXISTING TOP OF SLOPE
- EXISTING BOTTOM OF SLOPE
- G EXISTING GAS PIPELINE
- EXISTING GAS WELL
- EXISTING PIPE BOLLARD
- EXISTING FENCE
- EXISTING BUILDING
- EXISTING CENTERLINE OF DITCH
- WELL PAD CENTERLINE LOCATION
- PROPOSED LIMIT OF DISTURBANCE
- 1180 PROPOSED INDEX CONTOUR
- **1180** PROPOSED INTERMEDIATE CONTOUR
- × 1181.00 PROPOSED SPOT ELEVATION
- PROPOSED PIPE BOLLARD LINE
- PROPOSED TOP OF SLOPE
- PROPOSED BOTTOM OF SLOPE
- PROPOSED WATER SURFACE
- PROPOSED CENTERLINE OF DITCH
- PROPOSED RIP-RAP

NOTES:

1. SITE FEATURES AND TOPOGRAPHY WERE SURVEYED BY UNIVERSALPEGASUS INTERNATIONAL ON 7/21/11.
2. SURVEY BENCHMARK AND SURVEY CONTROL SHOULD BE ESTABLISHED BY THE CONTRACTOR FOR PIT LOCATION, DEPTH AND SLOPE LIMITS, PRIOR TO COMMENCING EXCAVATION ACTIVITIES.
3. WHERE WATERLINE RISER INTERFERES WITH PROPOSED PRODUCED WATER PIT, RISER SHALL BE RELOCATED BY OTHERS, PRIOR TO COMMENCING EXCAVATION ACTIVITIES.
4. PRIOR TO ANY EXCAVATION WORK ON A PAD THAT HAS PIPELINES, THE PIPELINE SHALL BE PREPPED FOR CONSTRUCTION. PIPELINE SHALL BE LOCKED-OUT/TAGGED OUT, PURGED, WATER TESTED AND OPEN TO ATMOSPHERE.
5. ONE-CALL SHALL BE MADE IN ACCORDANCE WITH COLORADO STATE LAW. AFTER ALL PIPES HAVE BEEN HORIZONTAL LOCATED, DEPTH OF PIPES MUST BE DETERMINED WHEN PIPELINES ARE WITHIN TWO FEET OF EXCAVATION. THIS SHALL BE DONE BY DIGGING 6' DOWN ON EITHER SIDE OF THE PIPE AND SLOUGHING OFF THE MATERIAL BY HAND TO LOCATE THE PIPE. WHERE SPACE IS CONFINED, POT-HOLING SHALL BE USED TO LOCATE THE PIPE.
6. PIPE BOLLARD, FENCING, SWING GATE, EMERGENCY EGRESS PERSONNEL GATES AND BIRD NETTING TO BE DESIGNED AND LOCATED BY OTHERS. PIPE BOLLARDS SHOWN ON PLAN ARE FOR INFORMATION ONLY, ALL PIPE BOLLARD PLACEMENT SHOULD AVOID EXISTING GAS AND WATER LINE INTERFERENCE.
7. HORIZONTAL DATUM=NAD 83
   HORIZONTAL PROJECTION=COLORADO CENTRAL ZONE
   VERTICAL DATUM=NAVD88 (GEOID 03)
   U.S. SURVEY FEET (GRID)
   COMBINED SCALE FACTOR=0.99966821
   PDOP=1.28.
8. WARNING SIGNS & ENTRY REGULATORY SIGNAGE TO BE PROVIDED & INSTALLED BY OWNER.
9. PIT VOLUME SHOWN ON PLANS IS MEASURED FROM WATER SURFACE ELEVATION TO BOTTOM OF BIT AND EXCLUDES THE 2' FREEBOARD VOLUME.
10. REMOVE EXISTING LINERS AND FILL IN EXISTING PIT WITH SPOILS FROM NEW PIT EXCAVATION. SPOILS SHOULD BE PLACED AND COMPACTED IN ACCORDANCE WITH THE PROJECT SPECIFICATIONS.
11. EXISTING STEEL PIPE BOLLARDS IN CONSTRUCTION AREA SHALL BE REMOVED AND SET ASIDE FOR RE-USE. HOLES SHALL BE FILLED WITH ONSITE FILL MATERIAL AND THOROUGHLY COMPACTED.
12. PRODUCED WATER PIT LINER SYSTEM SHALL CONSIST OF A PRIMARY AND SECONDARY LINER, A GEOTEXTILE CUSHION (GCL) LAYER, AND INTERSTITIAL DRAINAGE LAYER WITH LEAK DETECTION WELL. FOR LINER SYSTEM DETAILS SEE DWG. 520-DTL-32401
13. THE FOLLOWING PROJECT SPECIFICATIONS SHALL BE INCORPORATED BY REFERENCE:
    - 18675-520-SPC-001 EARTHWORK AND PIT CONSTRUCTION
    - 18675-520-SPC-002 GEOSYNTHETIC CLAY LINER
    - 18675-520-SPC-003 GEOCOMPOSITE DRAINAGE LAYER
    - 18675-520-SPC-004 GEOMEMBRANE LINER
14. CONTRACTOR TO INSTALL RIP-RAP (2"+ MATERIAL) AT DITCH OUTFALL SHOWN.
15. EXISTING DITCHES SHALL BE RETURNED TO FUNCTIONAL CONDITION ONCE WORK IS COMPLETE.
16. THE HILLSIDE NORTH AND EAST OF PIT SHALL BE STABILIZED AND SEEDED IMMEDIATELY AFTER COMPLETION OF FINISHED GRADING. CONTRACTOR SHALL INSTALL TEMPORARY EROSION CONTROL MEASURES AS REQUIRED.

PRELIMINARY EARTHWORK CALCULATIONS:
2944 CYDS CUT
869 CYDS FILL
2075 CYDS NET CUT

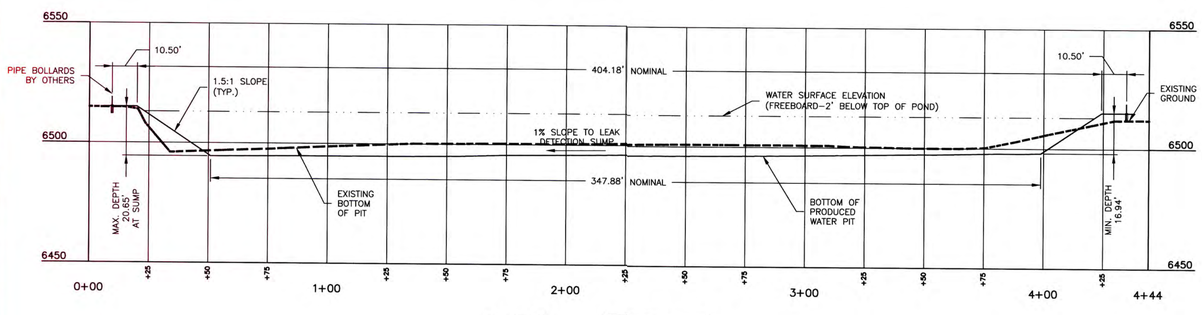

DETAIL A-A
SCALE : H:1"=30';V:1"=30'

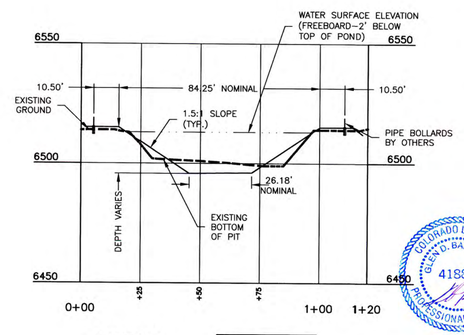

DETAIL B-B
SCALE : H:1"=30';V:1"=30'

SCALE IN FEET
0 30 60

COLORADO LICENSED GLEN D. BANKOWSKI 41839 PROFESSIONAL ENGINEER 1/05/12

811 Know what's below. Call before you dig.

ISSUED FOR CONSTRUCTION
01/05/12

REF. DWG. NO.	REFERENCE TITLE

NO	REVISION	DATE	DRAWN	CHKD
0	ISSUED FOR CONSTRUCTION	01/05/12	CLL	GDB

UniversalPegasus INTERNATIONAL
428 East 6400 South Suite 200 Salt Lake City, Utah 84107

DRAWN	SWH	DATE	08/05/11
CHECKED	GDB	DATE	11/15/11
APPROVED	GDB	DATE	11/18/11
SCALE	1"=30'-0"	SHEET	2 OF 2
JOB NO.	18675		
CLIENT	ENCANA NATURAL GAS		
CLIENT JOB NO.	–		

CIVIL/STRUCTURAL
WEST FORK PARACHUTE CREEK - A15 WELL PAD
PRODUCED WATER PIT
LOCATION & GRADING PLAN
T5S R96W GARFIELD COUNTY, COLORADO

encana natural gas

DRAWING NO. 18675-520-SIT-32202 REV. 0

File Path: S:\ActiveProjects\Encana\West Fork A15 Well Pad\20 - CAD\CIVIL\18675-520-SIT-32202.dwg Saved by: CHRISTOPHER.LARSON on: Jan. 5, 12 - 3:04 PM Plotted by: christopher larson on: Jan. 5, 12 - 3:04 PM

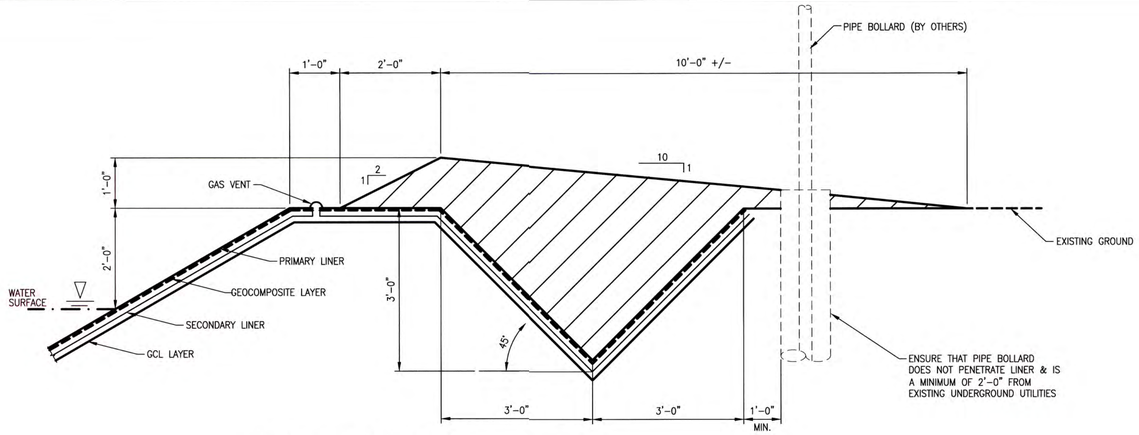

ANCHOR TRENCH DETAIL

SCALE : N.T.S. | 1 | 520-SIT-32202

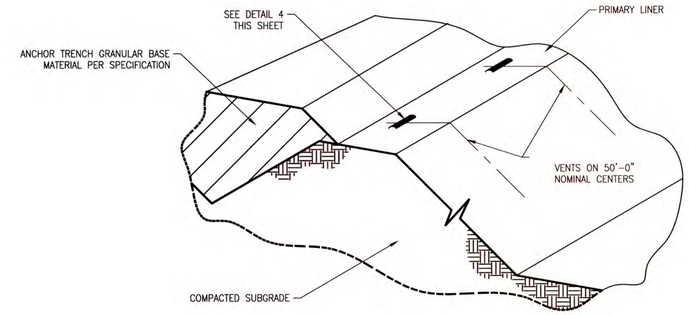

GAS VENT LOCATION DETAIL

SCALE : N.T.S. | 3 | 520-SIT-32202

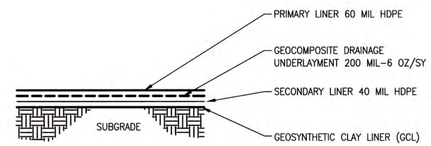

TYPICAL POND LINING SYSTEM DETAIL

SCALE : N.T.S. | 2 | 520-SIT-32202

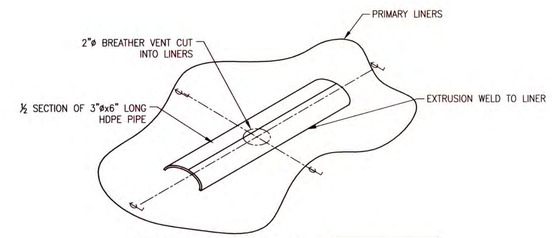

AIR/GAS VENT DETAIL

SCALE : N.T.S. | 4 | THIS SHEET

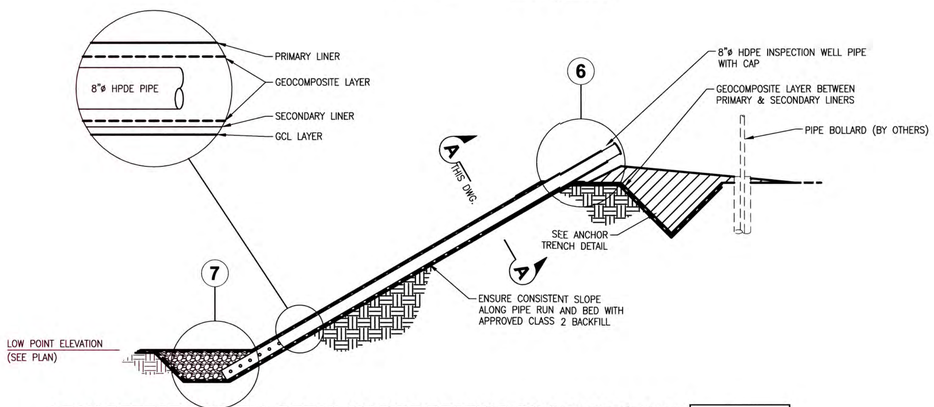

LEAK DETECTION WELL DETAIL W/ PIPE RESTING ON SLOPE GRADE

SCALE : N.T.S. | 5 | 520-SIT-32202

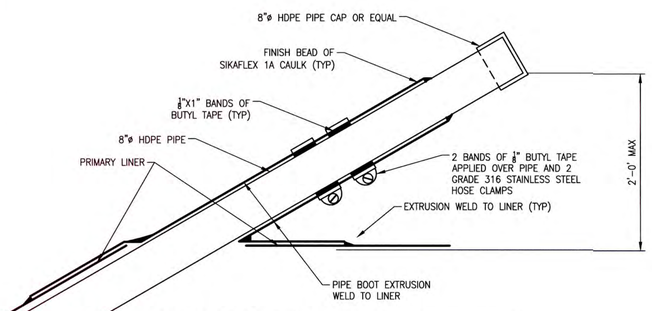

PIPE BOOT SEALING DETAIL

SCALE : N.T.S. | 6 | THIS SHEET

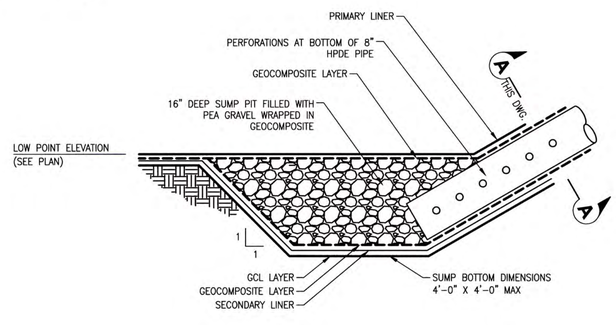

SUMP PIT FILLED WITH GRAVEL

SCALE : N.T.S. | 7 | THIS SHEET

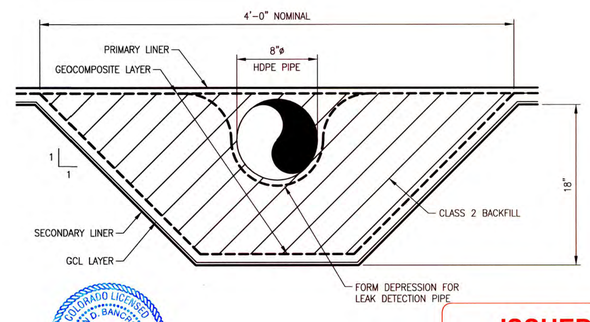

COLORADO LICENSED GLEN D. BANCROFT 41889 PROFESSIONAL ENGINEER 1/12/12

SECTION

SCALE : N.T.S. | A-A | THIS SHEET

ISSUED FOR CONSTRUCTION
01/05/12

REF. DWG. NO.	REFERENCE TITLE

NO	REVISION	DATE	DRAWN	CHKD

NO	REVISION	DATE	DRAWN	CHKD
0	ISSUED FOR CONSTRUCTION	01/05/12	CLL	GDB

UniversalPegasus INTERNATIONAL
4281 East 6400 South Suite 200 Salt Lake City, Utah 84107

DRAWN	CLL	DATE	11/10/11
CHECKED	GDB	DATE	11/15/11
APPROVED	GDB	DATE	11/18/11
SCALE	N.T.S.	SHEET	1
JOB NO.	18675		
CLIENT	ENCANA NATURAL GAS		
CLIENT JOB NO.	–		

CIVIL/STRUCTURAL

WEST FORK PARACHUTE CREEK - A15 WELL PAD
PRODUCED WATER PIT
CIVIL DETAILS

T5S R96W — GARFIELD COUNTY, COLORADO

encana natural gas

DRAWING NO. 18675-520-DTL-32401 | REV. 0

File Path: S:\ActiveProjects\Encana\West Fork A15 Well Pad\20 – CAD\CIVIL\18675-520-DTL-32401.dwg Saved by: CHRISTOPHER.LARSON on: Jan. 4, 12 – 2:59 PM Plotted by: christopher larson on: Jan. 5, 12 – 12:59 PM

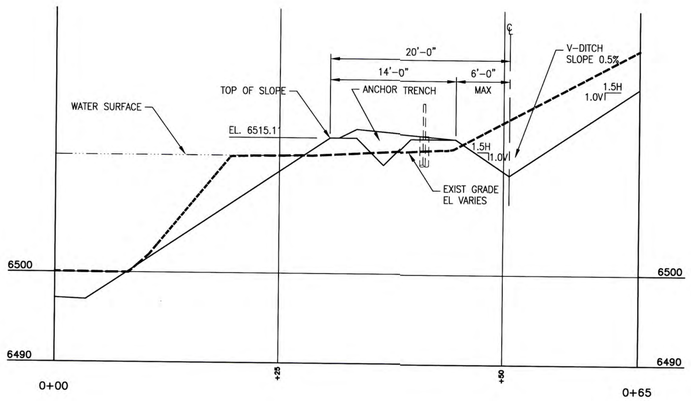

DETAIL C-C
SCALE : 1/8"=1'-0" 520-SIT-32202

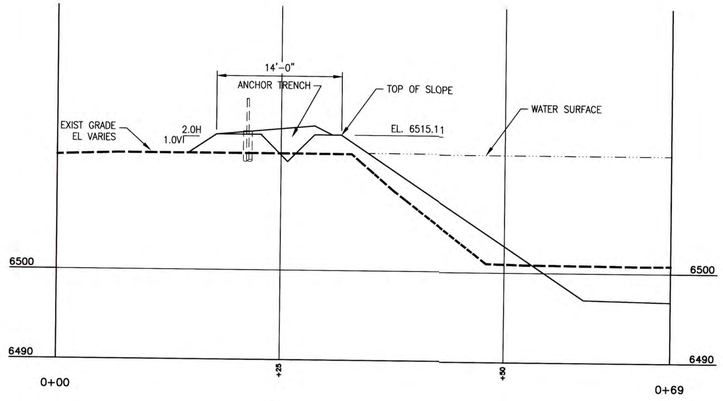

DETAIL D-D
SCALE : 1/8"=1'-0" 520-SIT-32202

COLORADO LICENSED
GLENN D. BAUMGARTNER
41882
PROFESSIONAL ENGINEER
1/5/12

ISSUED FOR CONSTRUCTION
01/05/12

REF. DWG. NO.	REFERENCE TITLE

NO	REVISION	DATE	DRAWN	CHKD
0	ISSUED FOR CONSTRUCTION	01/05/12	CLL	GDB

UniversalPegasus INTERNATIONAL
428 East 6400 South
Suite 200
Salt Lake City, Utah 84107

DRAWN	CLL	DATE	11/10/11
CHECKED	GDB	DATE	11/15/11
APPROVED	GDB	DATE	11/18/11
SCALE	N.T.S.	SHEET	1
JOB NO.	18675		
CLIENT	ENCANA NATURAL GAS		
CLIENT JOB NO.	–		

CIVIL/STRUCTURAL
WEST FORK PARACHUTE CREEK - A15 WELL PAD
PRODUCED WATER PIT
CIVIL DETAILS
T5S R96W GARFIELD COUNTY, COLORADO

encana™ natural gas

DRAWING NO. 18675-520-DTL-32402
REV. 0

File Path: S:\ActiveProjects\Encana\West Fork A15 Well Pad\20 - CAD\CIVIL\18675-520-DTL-32402.dwg Saved by: CHRISTOPHER.LARSON on: Jan. 5, 12 - 2:43 PM Plotted by: christopher larson on: Jan. 5, 12 - 2:45 PM

FORM 2A Rev 04/01

State of Colorado
Oil and Gas Conservation Commission

1120 Lincoln Street, Suite 801, Denver, Colorado 80205 Phone: (303) 894-2100 Fax: (303) 894-2109

DE	ET	OE	ES

Document Number: 400230807

Oil and Gas Location Assessment

☐ New Location ☒ Amend Existing Location Location#: 335800

Submit original plus one copy. This form is to be submitted to the COGCC prior to any ground disturbance activity associated with oil and gas development operations. This Assessment may be approved as a standalone application or submitted as an informational report accompanying an Application for Permit-To-Drill, Form 2. Approval of this Assessment will allow for the construction of the below specified location; however, it does not supersede any land use rules applied by the local land use authority. This form may serve as notice to land owners and other interested parties, please see the COGCC web site at http://colorado.gov/cogcc/ for all accompanying information pertinent to this Oil and Gas Location Assessment.

Location ID: **335800**

Expiration Date:

☐ This location assessment is included as part of a permit application.

1. CONSULTATION

☐ This location is included in a Comprehensive Drilling Plan. CDP # _____

☒ This location is in a sensitive wildlife habitat area.

☐ This location is in a wildlife restricted surface occupancy area.

☐ This location includes a Rule 306.d.(1)A.ii. variance request.

2. Operator

Operator Number: 100185

Name: ENCANA OIL & GAS (USA) INC

Address: 370 17TH ST STE 1700

City: DENVER State: CO Zip: 80202-5632

3. Contact Information

Name: Heather Mitchell

Phone: (720) 876-3070

Fax: (720) 876-4070

email: heather.mitchell@encana.com

4. Location Identification:

Name: N. Parachute Number: WF A15 596

County: GARFIELD

QuarterQuarter: NENE Section: 15 Township: 5S Range: 96W Meridian: 6 Ground Elevation: 6512

Define a single point as a location reference for the facility location. This point should be used as the point of measurement in the drawings to be submitted with this application. When the location is to be used as a well site then the point shall be a well location.

Footage at surface: 265 feet FNL , from North or South section line, and 827 feet FEL , from East or West section line.

Latitude: 39.621536 Longitude: -108.149049 PDOP Reading: 1.2 Date of Measurement: 07/21/2011

Instrument Operator's Name: Universal Pegasus

5. Facilities (Indicate the number of each type of oil and gas facility planned on location):

Special Purpose Pits:		Drilling Pits:		Wells:	8	Production Pits:		Dehydrator Units:	
Condensate Tanks:		Water Tanks:		Separators:	1	Electric Motors:		Multi-Well Pits:	1
Gas or Diesel Motors:		Cavity Pumps:		LACT Unit:		Pump Jacks:		Pigging Station:	
Electric Generators:		Gas Pipeline:	2	Oil Pipeline		Water Pipeline:	1	Flare:	
Gas Compressors:				VOC Combustor:		Oil Tanks:		Fuel Tanks:	

Other: 1 meter house, 1 chemical tan

6. Construction:

Date planned to commence construction: 04/12/2005 Size of disturbed area during construction in acres: 4.00

Estimated date that interim reclamation will begin: 03/01/2012 Size of location after interim reclamation in acres: 2.50

Estimated post-construction ground elevation: 6512 Will a closed loop system be used for drilling fluids: Yes [X]

Will salt sections be encountered during drilling: Yes [ ] No [X] Is H2S anticipated? Yes [ ] No [X]

Will salt (>15,000 ppm TDS Cl) or oil based muds be used: Yes [ ] No [X]

Mud disposal: Offsite [ ] Onsite [X] Method: Land Farming [ ] Land Spreading [ ] Disposal Facility [ ]

Other: Recycle and bury

7. Surface Owner:

Name: Encana Oil & Gas (USA)Inc Phone: 303-623-2300

Address: 370 17th Street Fax:

Address: Suite 1700 Email:

City: Denver State: CO Zip: 80202 Date of Rule 306 surface owner consultation:

Surface Owner: [X] Fee [ ] State [ ] Federal [ ] Indian

Mineral Owner: [X] Fee [ ] State [ ] Federal [ ] Indian

The surface owner is: [X] the mineral owner [ ] committed to an oil and gas lease

[ ] is the executer of the oil and gas lease [X] the applicant

The right to construct the location is granted by: [ ] oil and gas lease [ ] Surface Use Agreement [ ] Right of Way

[X] applicant is owner

Surface damage assurance if no agreement is in place: [ ] $2000 [ ] $5000 [ ] Blanket Surety ID

8. Reclamation Financial Assurance:

[X] Well Surety ID: 20100017 [ ] Gas Facility Surety ID: [ ] Waste Mgnt.Su rety ID:

9. Cultural:

Is the location in a high density area (Rule 603.b.): Yes [ ] No [X]

Distance, in feet, to nearest building: 15586 , public road: 121 , above ground utilit: 66327

, railroad: 55751 , property line: 488

10. Current Land Use (Check all that apply):

Crop Land: [ ] Irrigated [ ] Dry land [ ] Improved Pasture [ ] Hay Meadow [ ] CRP

Non-Crop Land: [X] Rangeland [ ] Timber [ ] Recreational [ ] Other (describe):

Subdivided: [ ] Industrial [ ] Commercial [ ] Residential

11. Future Land Use (Check all that apply):

Crop Land: [ ] Irrigated [ ] Dry land [ ] Improved Pasture [ ] Hay Meadow [ ] CRP

Non-Crop Land: [X] Rangeland [ ] Timber [ ] Recreational [ ] Other (describe):

Subdivided: [ ] Industrial [ ] Commercial [ ] Residential

12. Soils:

List all soil map units that occur within the proposed location. Attach the National Resource Conservation Service (NRCS) report showing the "Map Unit Description" report listing the soil typical vertical profile. This data is to used when segregating topsoil.

The required information can be obtained from the NRCS web site at http://soildatamart.nrcs.usda.gov/o r from the COGCC web site GIS Online map page found at http://colorado.gov/cogcc.Ins tructions are provided within the COGCC web site help section.

NRCS Map Unit Name: NRCS #62 Rock outcrop-Torriorthents complex

NRCS Map Unit Name:

NRCS Map Unit Name:

13. Plant Community:

Complete this section only if any portion of the disturbed area of the location's current land use is on non-crop land.

Are noxious weeds present: Yes ☐ No ☒

Plant species from: ☐ NRCS or, ☒ field observation Date of observation: 11/30/2011

List individual species:

Check all plant communities that exist in the disturbed area.

- ☐ Disturbed Grassland (Cactus, Yucca, Cheatgrass, Rye)
- ☐ Native Grassland (Bluestem, Grama, Wheatgrass, Buffalograss, Fescue, Oatgrass, Brome)
- ☒ Shrub Land (Mahogany, Oak, Sage, Serviceberry, Chokecherry)
- ☐ Plains Riparian (Cottonwood, Willow, Aspen, Maple, Poplar, Russian Olive, Tamarisk)
- ☐ Mountain Riparian (Cottonwood, Willow, Blue Spruce)
- ☐ Forest Land (Spruce, Fir, Ponderosa Pine, Lodgepole Pine, Juniper, Pinyon, Aspen)
- ☐ Wetlands Aquatic (Bullrush, Sedge, Cattail, Arrowhead)
- ☐ Alpine (above timberline)
- ☐ Other (describe):

14. Water Resources:

Rule 901.e. may require a sensitive area determination be performed. If this determination is performed the data is to be submitted with the Form 2A.

Is this a sensitive area: ☐ No ☒ Yes Was a Rule 901.e.Se nsitive Areas Determination performed: ☒ No ☐ Yes

Distance (in feet) to nearest surface water: 177 , water well: 1204 , depth to ground water: 30

Is the location in a riparian area: ☐ No ☒ Yes Was an Army Corps of Engineers Section 404 permit filed ☒ No ☐ Yes

Is the location within a Rule 317B Surface Water Suppl Area buffer zone:

☒ No ☐ 0-300 ft. zone ☐ 301-500 ft.z one ☐ 501-2640 ft. zone

If the location is within a Rule 317B Surface Water Supply Area buffer have all public water supply systems within 15 miles been notified: ☒ No ☐ Yes

15. Comments:

This pad will be reclaimed to the vegetation to the south. Encana owns the surface and the minerals. This pad is already built. Encana is not adding any wells, but will be reworking an existing pit on location. Existing pit #s are 425199 and 425200. Pit permit will be filed via email to the location assessment group.

I hereby certify that the statements made in this form are, to the best of my knowledge, true, correct and complete.

Signed: Date: 01/19/2012 Email: heather.mitchell@encana.com

Print Name: Heather Mitchell Title: Regulatory analyst

Based on the information provided herein, this Application for Permit-to-Drill complies with COGCC Rules and applicable orders and is hereby approved.

COGCC Approved: **Director of COGCC** Date:

CONDITIONS OF APPROVAL, IF ANY:

All representations, stipulations and conditions of approval stated in this Form 2A for this location shall constitute representations, stipulations and conditions of a pproval for any and all subsequent operations on the location unless this Form 2A is modified by Sundry Notice, Form 4 or an Amended Form 2A.

Attachment Check List

Att Doc Num	Name
400230807	FORM 2A SUBMITTED
400243042	NRCS MAP UNIT DESC
400243044	ACCESS ROAD MAP
400243047	CONST.L AYOUT DRAWINGS
400243071	LOCATION DRAWING
400243080	MULTI-WELL PLAN
400243081	HYDROLOGY MAP
400243085	REFERENCE AREA PICTURES
400243087	REFERENCE AREA PICTURES
400243089	REFERENCE AREA PICTURES
400243091	REFERENCE AREA PICTURES

Total Attach: 11 Files

General Comments

User Group	Comment	Comment Date

Total: 0 comment(s)

BMP

Type	Comment
Wildlife	• Prohibit Encana employees and contractors from carrying projectile weapons.Ex cept during company organized events. • Prohibit pets on property. • Strategically apply fugitive dust control measures, including enforcing established speed limits on Encana private roads, to reduce fugitive dust and coating of vegetation and deposition in water sources.
Construction	• Use solar panels as an alternative energy source for on-location production equipment, where appropriate, economically and technically feasible. • Use multiple gathering lines placed in a single trench to minimize disturbance and construction, where appropriate, economically and technically feasible. • Install trench plugs (sloped to allow wildlife or livestock to exit the trench should they enter) at known wildlife or livestock trails to allow safe crossing on long spans of open trench, where appropriate, economically and technically feasible. • Maintain a minimum of five feet of soil cover between the pipeline and the lowest point of the drainage or water body channel.

Total: 2 comment(s)

FORM
26
Rev 6/99

State of Colorado
Oil and Gas Conservation Commission

1120 Lincoln Street, Suite 801, Denver, Colorado 80203 (303)894-2100 Fax:(303)894-2109

FOR OGCC USE ONLY

SOURCE OF PRODUCED WATER FOR DISPOSAL

This form must be completed for any new disposal site and for any change in sources of produced water for an existing disposal site.

Complete the Attachment Checklist

Chemical Analysis of fluid	Oper	OGCC

If more space is required, attach additional sheet.

OGCC Operator Number: 100185
Name of Operator: Encana Oil & Gas (USA), Inc.
Address: 370 17th Street, Suite 1700
City: Denver State: CO Zip: 80202

Contact Name and Telephone:
Heather Mitchell
No: 720-876-3070
Fax: 720-876-4070

OGCC Disposal Facility Number: _____
Operator's Disposal Facility Name: _____ Operator's Disposal Facility Number: _____
Location (QtrQtr, Sec, Twp, Rng, Meridian): NENE, Sec. 15, T5S, R96W
Address: _____
City: _____ State: CO Zip: _____ County: Garfield

Add Source: ☑ OGCC Lease No: _____ API No: _____ Well Name & No: Please see attached list and map
Operator Name: Encana Oil & Gas (USA), Inc Operator No: 100185
Delete Source: ☐ Location: QtrQtr: _____ Section: _____ Township: _____ Range: _____ Producing Formation: _____
Analysis Attached? ☑ Yes ☐ No Transported to disposal site via: ☑ Pipeline ☐ Truck TDS: 14200

Add Source: ☐ OGCC Lease No: _____ API No: _____ Well Name & No: _____
Operator Name: _____ Operator No: _____
Delete Source: ☐ Location: QtrQtr: _____ Section: _____ Township: _____ Range: _____ Producing Formation: _____
Analysis Attached? ☐ Yes ☐ No Transported to disposal site via: ☐ Pipeline ☐ Truck TDS: _____

Add Source: ☐ OGCC Lease No: _____ API No: _____ Well Name & No: _____
Operator Name: _____ Operator No: _____
Delete Source: ☐ Location: QtrQtr: _____ Section: _____ Township: _____ Range: _____ Producing Formation: _____
Analysis Attached? ☐ Yes ☐ No Transported to disposal site via: ☐ Pipeline ☐ Truck TDS: _____

Add Source: ☐ OGCC Lease No: _____ API No: _____ Well Name & No: _____
Operator Name: _____ Operator No: _____
Delete Source: ☐ Location: QtrQtr: _____ Section: _____ Township: _____ Range: _____ Producing Formation: _____
Analysis Attached? ☐ Yes ☐ No Transported to disposal site via: ☐ Pipeline ☐ Truck TDS: _____

Add Source: ☐ OGCC Lease No: _____ API No: _____ Well Name & No: _____
Operator Name: _____ Operator No: _____
Delete Source: ☐ Location: QtrQtr: _____ Section: _____ Township: _____ Range: _____ Producing Formation: _____
Analysis Attached? ☐ Yes ☐ No Transported to disposal site via: ☐ Pipeline ☐ Truck TDS: _____

Add Source: ☐ OGCC Lease No: _____ API No: _____ Well Name & No: _____
Operator Name: _____ Operator No: _____
Delete Source: ☐ Location: QtrQtr: _____ Section: _____ Township: _____ Range: _____ Producing Formation: _____
Analysis Attached? ☐ Yes ☐ No Transported to disposal site via: ☐ Pipeline ☐ Truck TDS: _____

I hereby certify that the statements made in this form are, to the best of my knowledge, true, correct, and complete.
Print Name: Heather Mitchell Signed: Heather Mitchell
Title: Regulatory Analyst Date: 1.19.2012

OGCC Approved: _____ Title: _____ Date: _____

CONDITIONS OF APPROVAL, IF ANY:

SOURCES FOR PRODUCED WATER

As of December 20, 2011

The following wells are sources of produced water:

NON-UNIT Wells:

Well Name and Number	Well API Number	Field	Mineral Owner - Lease #	Qtr-Qtr / Lot	Sec	Twp	Rng
EMF 06C-16 H17 595	05-045-20503-0000	Grand Valley # 31290	FEE	SENE	17	5S	95W
EMF 06D-16 H17 595	NOT YET ASSIGNED	Grand Valley # 31290	FEE	SENE	17	5S	95W
EMF 07C-16 H17 595	05-045-20506-0000	Grand Valley # 31290	FEE	SENE	17	5S	95W
EMF 07D-16 H17 595	05-045-20505-0000	Grand Valley # 31290	FEE	SENE	17	5S	95W
EMF 07E-16 H17 595	05-045-20499-0000	Grand Valley # 31290	FEE	SENE	17	5S	95W
EMF 09B-17 H17 595	05-045-20508-0000	Grand Valley # 31290	FEE	SENE	17	5S	95W
EMF 09C-17 H17 595	NOT YET ASSIGNED	Grand Valley # 31290	FEE	SENE	17	5S	95W
EMF 09D-17 H17 595	05-045-20496-0000	Grand Valley # 31290	FEE	SENE	17	5S	95W
EMF 10A-16 H17 595	05-045-20495-0000	Grand Valley # 31290	FEE	SENE	17	5S	95W
EMF 10B-16 H17 595	05-045-20494-0000	Grand Valley # 31290	FEE	SENE	17	5S	95W
EMF 10C-16 H17 595	NOT YET ASSIGNED	Grand Valley # 31290	FEE	SENE	17	5S	95W
EMF 10D-16 H17 595	05-045-20497-0000	Grand Valley # 31290	FEE	SENE	17	5S	95W
EMF 11A-16 H17 595	NOT YET ASSIGNED	Grand Valley # 31290	FEE	SENE	17	5S	95W
EMF 11B-16 H17 595	05-045-20501-0000	Grand Valley # 31290	FEE	SENE	17	5S	95W
EMF 11C-16 H17 595	05-045-20502-0000	Grand Valley # 31290	FEE	SENE	17	5S	95W
EMF 11D-16 H17 595	NOT YET ASSIGNED	Grand Valley # 31290	FEE	SENE	17	5S	95W
EMF 12A-16 H17 595	05-045-20512-0000	Grand Valley # 31290	FEE	SENE	17	5S	95W
EMF 12B-16 H17 595	05-045-20504-0000	Grand Valley # 31290	FEE	SENE	17	5S	95W
EMF 12C-16 H17 595	05-045-20510-0000	Grand Valley # 31290	FEE	SENE	17	5S	95W
EMF 12D-16 H17 595	05-045-20498-0000	Grand Valley # 31290	FEE	SENE	17	5S	95W
EMF 13A-16 H17 595	NOT YET ASSIGNED	Grand Valley # 31290	FEE	SENE	17	5S	95W
EMF 13B-16 H17 595	NOT YET ASSIGNED	Grand Valley # 31290	FEE	SENE	17	5S	95W
EMF 13C-16 H17 595	NOT YET ASSIGNED	Grand Valley # 31290	FEE	SENE	17	5S	95W

SOURCES FOR PRODUCED WATER

As of December 20, 2011

The following wells are sources of produced water:

NON-UNIT Wells:

Well Name and Number	Well API Number	Field	Mineral Owner - Lease #	Qtr-Qtr / Lot	Sec	Twp	Rng
EMF 16A-17 H17 595	05-045-20507-0000	Grand Valley # 31290	FEE	SENE	17	5S	95W
Encana RPW 32-26-596	05-045-15966-0000	Grand Valley # 31290	FEE	SENE	26	5S	96W
Encana RPW 332-26-596	05-045-15968-0000	Grand Valley # 31290	FEE	SENE	26	5S	96W
Encana RPW 33-26-596	05-045-15969-0000	Grand Valley # 31290	FEE	SENE	26	5S	96W
Encana RPW 333-26-596	05-045-15954-0000	Grand Valley # 31290	FEE	SENE	26	5S	96W
Encana RPW 334-26-596	05-045-15955-0000	Grand Valley # 31290	FEE	SENE	26	5S	96W
Encana RPW 341-26-596	05-045-15970-0000	Grand Valley # 31290	FEE	SENE	26	5S	96W
Encana RPW 342-26-596	05-045-15967-0000	Grand Valley # 31290	FEE	SENE	26	5S	96W
Encana RPW 34-26-596	05-045-15960-0000	Grand Valley # 31290	FEE	SENE	26	5S	96W
Encana RPW 41-26-596	05-045-12362-0000	Grand Valley # 31290	FEE	NWNE	26	5S	96W
Encana RPW 413-23-596	05-045-14383-0000	Grand Valley # 31290	FED -COC44963	SENW	23	5S	96W
Encana RPW 42-26-596	05-045-15958-0000	Grand Valley # 31290	FEE	SENE	26	5S	96W
Encana RPW 431-26-596	05-045-12363-0000	Grand Valley # 31290	FEE	NWNE	26	5S	96W
Encana RPW 432-26-596	05-045-15956-0000	Grand Valley # 31290	FEE	SENE	26	5S	96W
Encana RPW 43-26-596	05-045-15964-0000	Grand Valley # 31290	FEE	SENE	26	5S	96W
Encana RPW 433-26-596	05-045-15965-0000	Grand Valley # 31290	FEE	SENE	26	5S	96W
Encana RPW 434-26-596	05-045-15961-0000	Grand Valley # 31290	FEE	SENE	26	5S	96W
Encana RPW 441-26-596	05-045-12364-0000	Grand Valley # 31290	FEE	NWNE	26	5S	96W
Encana RPW 442-26-596	05-045-15996-0000	Grand Valley # 31290	FEE	SENE	26	5S	96W
Encana RPW 443-26-596	05-045-15957-0000	Grand Valley # 31290	FEE	SENE	26	5S	96W
Encana RPW 533-26-596	05-045-15959-0000	Grand Valley # 31290	FEE	SENE	26	5S	96W
Encana RPW 534-26-596	05-045-15962-0000	Grand Valley # 31290	FEE	SENE	26	5S	96W
Encana RPW 543-26-596	05-045-15963-0000	Grand Valley # 31290	FEE	SENE	26	5S	96W
N. Parachute DH01-31 G29 595 (H)	05-045-20145-0001	Grand Valley # 31290	FEE	SWNE	29	5S	95W

SOURCES FOR PRODUCED WATER

As of December 20, 2011

The following wells are sources of produced water:

NON-UNIT Wells:

Well Name and Number	Well API Number	Field	Mineral Owner - Lease #	Qtr-Qtr / Lot	Sec	Twp	Rng
N. Parachute DH01-31 G29 595 (V)	05-045-20145-0000	Grand Valley # 31290	FEE	SWNE	29	5S	95W
N. Parachute DH05-20 G29 595 (H)	05-045-20025-0002	Grand Valley # 31290	FEE	SWNE	29	5S	95W
N. Parachute DH10A-21 H17 696	05-045-20398-0000	Grand Valley # 31290	FEE	Lot 7	17	6S	96W
N. Parachute DH14A-04 H17 696	05-045-20399-0000	Grand Valley # 31290	FEE	Lot 7	17	6S	96W
N. Parachute DHN6B-10 H15 596	NOT YET ASSIGNED	Grand Valley # 31290	FEE	SENE	15	5S	96W
N. Parachute DHN7B-31 O04 696	05-045-18802-0000	Grand Valley # 31290	FEE	Lot 9	4	6S	96W
N. Parachute DHS3B-23 H15 596	04-045-21122-0000	Grand Valley # 31290	FEE	SENE	15	5S	96W
N. Parachute DHS6B-31 O04 696	05-045-18796-0000	Grand Valley # 31290	FEE	Lot 9	4	6S	96W
N. Parachute DHS8B-9 O04 696	05-045-18806-0000	Grand Valley # 31290	FEE	Lot 9	4	6S	96W
N. Parachute EF01A-24 E19 595	05-045-14925-0000	Grand Valley # 31290	FEE	Lot 2	19	5S	95W
N. Parachute EF01A-28 A28B 595	05-045-15268-0000	Grand Valley # 31290	FEE	NENE	28	5S	95W
N. Parachute EF01A-31 I30A 595	05-045-15104-0000	Grand Valley # 31290	FEE	NESE	30	5S	95W
N. Parachute EF01A-32 G29 595	05-045-20103-0000	Grand Valley # 31290	FEE	SWNE	29	5S	95W
N. Parachute EF01A-34 P27 595	05-045-20298-0000	Grand Valley # 31290	FEE	SESE	27	5S	95W
N. Parachute EF01B-24 E19 595	05-045-14484-0000	Grand Valley # 31290	FEE	Lot 2	19	5S	95W
N. Parachute EF01B-29 H29A 595	05-045-16065-0000	Grand Valley # 31290	FEE	SENE	29	5S	95W
N. Parachute EF01B-30 I30 595	05-045-15346-0000	Grand Valley # 31290	FEE	NESE	30	5S	95W
N. Parachute EF01B-34 P27 595	05-045-20322-0000	Grand Valley # 31290	FEE	SESE	27	5S	95W
N. Parachute EF01B A28 595	05-045-10698-0000	Grand Valley # 31290	FEE	NENE	28	5S	95W
N. Parachute EF01B C27A 595	05-045-11580-0000	Grand Valley # 31290	FEE	NENW	27	5S	95W
N. Parachute EF01B D19A 595	05-045-12710-0000	Grand Valley # 31290	FEE	Lot 2	19	5S	95W
N. Parachute EF01B G29 595	05-045-11652-0000	Grand Valley # 31290	FEE	SWNE	29	5S	95W
N. Parachute EF01B H29A 595	05-045-11416-0000	Grand Valley # 31290	FEE	SENE	29	5S	95W
N. Parachute EF01B I30 595	05-045-11246-0000	Grand Valley # 31290	FEE	NESE	30	5S	95W

SOURCES FOR PRODUCED WATER

As of December 20, 2011

The following wells are sources of produced water:

NON-UNIT Wells:

Well Name and Number	Well API Number	Field	Mineral Owner - Lease #	Qtr-Qtr / Lot	Sec	Twp	Rng
N. Parachute EF01B I30A 595	05-045-11281-0000	Grand Valley # 31290	FEE	NESE	30	5S	95W
N. Parachute EF01C-28 A28B 595	05-045-15267-0000	Grand Valley # 31290	FEE	NENE	28	5S	95W
N. Parachute EF01C-31 I30A 595	05-045-15105-0000	Grand Valley # 31290	FEE	NESE	30	5S	95W
N. Parachute EF01C-32 G29 595	05-045-19964-0000	Grand Valley # 31290	FEE	SWNE	29	5S	95W
N. Parachute EF01C-34 P27 595	05-045-20289-0000	Grand Valley # 31290	FEE	SESE	27	5S	95W
N. Parachute EF01D-24 D19A 595	05-045-12703-0000	Grand Valley # 31290	FEE	Lot 2	19	5S	95W
N. Parachute EF01D-24 E19 595	05-045-14485-0000	Grand Valley # 31290	FEE	Lot 2	19	5S	95W
N. Parachute EF01D-28 D27A 595	05-045-17640-0000	Grand Valley # 31290	FEE	NWNW	27	5S	95W
N. Parachute EF01D-31 I30 595	05-045-11252-0000	Grand Valley # 31290	FEE	NESE	30	5S	95W
N. Parachute EF01D-32 G29 595	05-045-19975-0000	Grand Valley # 31290	FEE	SWNE	29	5S	95W
N. Parachute EF01D-34 P27 595	05-045-20324-0000	Grand Valley # 31290	FEE	SESE	27	5S	95W
N. Parachute EF01D D19A 595	05-045-12709-0000	Grand Valley # 31290	FEE	Lot 2	19	5S	95W
N. Parachute EF01D H29A 595	05-045-11419-0000	Grand Valley # 31290	FEE	SENE	29	5S	95W
N. Parachute EF01D I30 595	05-045-11253-0000	Grand Valley # 31290	FEE	NESE	30	5S	95W
N. Parachute EF01D P27 595	05-045-11308-0000	Grand Valley # 31290	FEE	SESE	27	5S	95W
N. Parachute EF01E-34 P27 595	05-045-20284-0000	Grand Valley # 31290	FEE	SESE	27	5S	95W
N. Parachute EF01F-34 P27 595	05-045-20297-0000	Grand Valley # 31290	FEE	SESE	27	5S	95W
N. Parachute EF02A-24 E19 595	05-045-14924-0000	Grand Valley # 31290	FEE	Lot 2	19	5S	95W
N. Parachute EF02A-28 C28 595	05-045-17592-0000	Grand Valley # 31290	FEE	NENW	28	5S	95W
N. Parachute EF02A-30 I30A 595	05-045-15046-0000	Grand Valley # 31290	FEE	NESE	30	5S	95W
N. Parachute EF02A-31 N30 595	05-045-15201-0000	Grand Valley # 31290	FEE	Lot 15	30	5S	95W
N. Parachute EF02A-32 F29 595	05-045-16174-0000	Grand Valley # 31290	FEE	SENW	29	5S	95W
N. Parachute EF02B-24 E19 595	05-045-14479-0000	Grand Valley # 31290	FEE	Lot 2	19	5S	95W
N. Parachute EF02B-32 G29 595	05-045-11656-0000	Grand Valley # 31290	FEE	SWNE	29	5S	95W

SOURCES FOR PRODUCED WATER

As of December 20, 2011

The following wells are sources of produced water:

NON-UNIT Wells:

Well Name and Number	Well API Number	Field	Mineral Owner - Lease #	Qtr-Qtr / Lot	Sec	Twp	Rng
N. Parachute EF02B A28 595	05-045-10474-0000	Grand Valley # 31290	FEE	NENE	28	5S	95W
N. Parachute EF02B D19A 595	05-045-12707-0000	Grand Valley # 31290	FEE	Lot 2	19	5S	95W
N. Parachute EF02B D27 595	05-045-14334-0000	Grand Valley # 31290	FEE	NWNW	27	5S	95W
N. Parachute EF02B G29 595	05-045-13838-0000	Grand Valley # 31290	FEE	SWNE	29	5S	95W
N. Parachute EF02B I30A 595	05-045-11282-0000	Grand Valley # 31290	FEE	NESE	30	5S	95W
N. Parachute EF02B N30 595	05-045-11552-0000	Grand Valley # 31290	FEE	Lot 15	30	5S	95W
N. Parachute EF02C-24 E19 595	05-045-11711-0000	Grand Valley # 31290	FEE	Lot 2	19	5S	95W
N. Parachute EF02C-28 C28 596	05-045-17591-0000	Grand Valley # 31290	FEE	NENW	28	5S	95W
N. Parachute EF02C-29 G29 595	05-045-20101-0000	Grand Valley # 31290	FEE	SWNE	29	5S	95W
N. Parachute EF02C-30 I30A 595	05-045-15051-0000	Grand Valley # 31290	FEE	NESE	30	5S	95W
N. Parachute EF02C-31 N30 595	05-045-15202-0000	Grand Valley # 31290	FEE	Lot 15	30	5S	95W
N. Parachute EF02C-32 G29 595	05-045-19973-0000	Grand Valley # 31290	FEE	SWNE	29	5S	95W
N. Parachute EF02D-24 E19 595	05-045-11713-0000	Grand Valley # 31290	FEE	Lot 2	19	5S	95W
N. Parachute EF02D-32 G29 595	05-045-19972-0000	Grand Valley # 31290	FEE	SWNE	29	5S	95W
N. Parachute EF02D A28 595	05-045-10702-0000	Grand Valley # 31290	FEE	NENE	28	5S	95W
N. Parachute EF02D D19A 595	05-045-12708-0000	Grand Valley # 31290	FEE	Lot 2	19	5S	95W
N. Parachute EF02D D19B 595	05-045-16982-0000	Grand Valley # 31290	FEE	Lot 2	19	5S	95W
N. Parachute EF02D G29 595	05-045-13844-0000	Grand Valley # 31290	FEE	SWNE	29	5S	95W
N. Parachute EF02D I30A 595	05-045-11283-0000	Grand Valley # 31290	FEE	NESE	30	5S	95W
N. Parachute EF02D J27 595	05-045-13478-0000	Grand Valley # 31290	FEE	NWSE	27	5S	95W
N. Parachute EF02D N30 595	05-045-11555-0000	Grand Valley # 31290	FEE	Lot 15	30	5S	95W
N. Parachute EF03A-29 I30 595	05-045-15342-0000	Grand Valley # 31290	FEE	NESE	30	5S	95W
N. Parachute EF03A-30 I30A 595	05-045-15097-0000	Grand Valley # 31290	FEE	NESE	30	5S	95W
N. Parachute EF03A-31 N30 595	05-045-15206-0000	Grand Valley # 31290	FEE	Lot 15	30	5S	95W

SOURCES FOR PRODUCED WATER

As of December 20, 2011

The following wells are sources of produced water:

NON-UNIT Wells:

Well Name and Number	Well API Number	Field	Mineral Owner - Lease #	Qtr-Qtr / Lot	Sec	Twp	Rng
N. Parachute EF03A-32 F29 595	05-045-16173-0000	Grand Valley # 31290	FEE	SENW	29	5S	95W
N. Parachute EF03A-33 C28A 595	05-045-18076-0000	Grand Valley # 31290	FEE	NENW	28	5S	95W
N. Parachute EF03B-19 D19A 595	05-045-12514-0000	Grand Valley # 31290	FEE	Lot 2	19	5S	95W
N. Parachute EF03B-30 I30A 595	05-045-15098-0000	Grand Valley # 31290	FEE	NESE	30	5S	95W
N. Parachute EF03B-32 F29 595	05-045-16161-0000	Grand Valley # 31290	FEE	SENW	29	5S	95W
N. Parachute EF03B C28 595	05-045-11874-0000	Grand Valley # 31290	FEE	NENW	28	5S	95W
N. Parachute EF03B D19A 595	05-045-12772-0000	Grand Valley # 31290	FEE	Lot 2	19	5S	95W
N. Parachute EF03B D27 595	05-045-14332-0000	Grand Valley # 31290	FEE	NWNW	27	5S	95W
N. Parachute EF03B G29 595	05-045-13841-0000	Grand Valley # 31290	FEE	SWNE	29	5S	95W
N. Parachute EF03B N30 595	05-045-11554-0000	Grand Valley # 31290	FEE	Lot 15	30	5S	95W
N. Parachute EF03C-30 I30A 595	05-045-15096-0000	Grand Valley # 31290	FEE	NESE	30	5S	95W
N. Parachute EF03C-32 F29 595	05-045-16175-0000	Grand Valley # 31290	FEE	SENW	29	5S	95W
N. Parachute EF03C D19A 595	05-045-12706-0000	Grand Valley # 31290	FEE	Lot 2	19	5S	95W
N. Parachute EF03C L29 595	05-045-11646-0000	Grand Valley # 31290	FEE	NWSW	29	5S	95W
N. Parachute EF03D-28 C28A 595	05-045-18086-0000	Grand Valley # 31290	FEE	NENW	28	5S	95W
N. Parachute EF03D-31 N30 595	05-045-15205-0000	Grand Valley # 31290	FEE	Lot 15	30	5S	95W
N. Parachute EF03D-32 L29 595	05-045-11641-0000	Grand Valley # 31290	FEE	NWSW	29	5S	95W
N. Parachute EF03D C27 595	05-045-10431-0000	Grand Valley # 31290	FEE	NENW	27	5S	95W
N. Parachute EF03D C28 595	05-045-11439-0000	Grand Valley # 31290	FEE	NENW	28	5S	95W
N. Parachute EF03D D19A 595	05-045-12705-0000	Grand Valley # 31290	FEE	Lot 2	19	5S	95W
N. Parachute EF03D D19B 595	05-045-16981-0000	Grand Valley # 31290	FEE	Lot 2	19	5S	95W
N. Parachute EF03D I30A 595	05-045-11284-0000	Grand Valley # 31290	FEE	NESE	30	5S	95W
N. Parachute EF03D L29 595	05-045-11640-0000	Grand Valley # 31290	FEE	NWSW	29	5S	95W
N. Parachute EF03D N30 595	05-045-11557-0000	Grand Valley # 31290	FEE	Lot 15	30	5S	95W

SOURCES FOR PRODUCED WATER

As of December 20, 2011

The following wells are sources of produced water:

NON-UNIT Wells:

Well Name and Number	Well API Number	Field	Mineral Owner - Lease #	Qtr-Qtr / Lot	Sec	Twp	Rng
N. Parachute EF04A-27 D27A 595	05-045-18771-0000	Grand Valley # 31290	FEE	NWNW	27	5S	95W
N. Parachute EF04A-29 I30 595	05-045-15355-0001	Grand Valley # 31290	FEE	NESE	30	5S	95W
N. Parachute EF04A-32 I30 595	05-045-15353-0000	Grand Valley # 31290	FEE	NESE	30	5S	95W
N. Parachute EF04A-33 G29 595	05-045-19969-0000	Grand Valley # 31290	FEE	SWNE	29	5S	95W
N. Parachute EF04A D19A 595	05-045-12712-0000	Grand Valley # 31290	FEE	Lot 2	19	5S	95W
N. Parachute EF04B-33 G29 595	05-045-19976-0000	Grand Valley # 31290	FEE	SWNE	29	5S	95W
N. Parachute EF04B A28B 595	05-045-12358-0000	Grand Valley # 31290	FEE	NENE	28	5S	95W
N. Parachute EF04B D19B 595	05-045-16983-0000	Grand Valley # 31290	FEE	Lot 2	19	5S	95W
N. Parachute EF04B D28 595	05-045-11623-0000	Grand Valley # 31290	FEE	NWNW	28	5S	95W
N. Parachute EF04B I30 595	05-045-11247-0000	Grand Valley # 31290	FEE	NESE	30	5S	95W
N. Parachute EF04B L29 595	05-045-11650-0000	Grand Valley # 31290	FEE	NWSW	29	5S	95W
N. Parachute EF04C-27 A28B 595	05045152660000	Grand Valley # 31290	FEE	NENE	28	5S	95W
N. Parachute EF04C-27 A28B 595	05-045-15266-0100	Grand Valley # 31290	FEE	NENE	28	5S	95W
N. Parachute EF04C-29 I30 595	05-045-15349-0000	Grand Valley # 31290	FEE	NESE	30	5S	95W
N. Parachute EF04C-32 I30A 595	05-045-15050-0000	Grand Valley # 31290	FEE	NESE	30	5S	95W
N. Parachute EF04D-19 L19 595	05-045-14493-0000	Grand Valley # 31290	FED -COC 44963	Lot 9	19	5S	95W
N. Parachute EF04D-29 I30 595	05-045-15348-0000	Grand Valley # 31290	FEE	NESE	30	5S	95W
N. Parachute EF04D-32 L29 595	05-045-11644-0000	Grand Valley # 31290	FEE	NWSW	29	5S	95W
N. Parachute EF04D D19 595	05-045-10109-0000	Grand Valley # 31290	FEE	Lot 2	19	5S	95W
N. Parachute EF04D D27 595	05-045-14333-0000	Grand Valley # 31290	FEE	NWNW	27	5S	95W
N. Parachute EF04D D28 595	05-045-11587-0000	Grand Valley # 31290	FEE	NWNW	28	5S	95W
N. Parachute EF05A-20 C29 595	05-045-15547-0000	Grand Valley # 31290	FEE	NENW	29	5S	95W
N. Parachute EF05A-22 D27A 595	05-045-17648-0000	Grand Valley # 31290	FEE	NWNW	27	5S	95W
N. Parachute EF05A-27 D27 595	05-045-11779-0000	Grand Valley # 31290	FEE	NWNW	27	5S	95W

SOURCES FOR PRODUCED WATER

As of December 20, 2011

The following wells are sources of produced water:

NON-UNIT Wells:

Well Name and Number	Well API Number	Field	Mineral Owner - Lease #	Qtr-Qtr / Lot	Sec	Twp	Rng
N. Parachute EF05A-28 C28A 595	05-045-18077-0000	Grand Valley # 31290	FEE	NENW	28	5S	95W
N. Parachute EF05A-29 I30 595	05-045-15350-0000	Grand Valley # 31290	FEE	NESE	30	5S	95W
N. Parachute EF05A-32 I30A 595	05-045-15048-0000	Grand Valley # 31290	FEE	NESE	30	5S	95W
N. Parachute EF05B-19 E19 595	05-045-11714-0000	Grand Valley # 31290	FEE	Lot 5	19	5S	95W
N. Parachute EF05B-19 L19 595	05-045-14496-0000	Grand Valley # 31290	FED -COC 44963	Lot 9	19	5S	95W
N. Parachute EF05B-20 C29 595	05-045-15556-0000	Grand Valley # 31290	FEE	NENW	29	5S	95W
N. Parachute EF05B-22 D27 595	05-045-11723-0000	Grand Valley # 31290	FEE	NWNW	27	5S	95W
N. Parachute EF05B-32 L29 595	05-045-11637-0000	Grand Valley # 31290	FEE	NWSW	29	5S	95W
N. Parachute EF05B D27 595	05-045-11743-0000	Grand Valley # 31290	FEE	NWNW	27	5S	95W
N. Parachute EF05B D28 595	05-045-11588-0000	Grand Valley # 31290	FEE	NWNW	28	5S	95W
N. Parachute EF05B E19 595	05-045-11717-0000	Grand Valley # 31290	FEE	Lot 5	19	5S	95W
N. Parachute EF05B L29 595	05-045-11649-0000	Grand Valley # 31290	FEE	NWSW	29	5S	95W
N. Parachute EF05C-20 C29 595	05-045-15558-0000	Grand Valley # 31290	FEE	NENW	29	5S	95W
N. Parachute EF05C-22 D27A 595	05-045-17647-0000	Grand Valley # 31290	FEE	NWNW	27	5S	95W
N. Parachute EF05C-28 C28A 595	05-045-18078-0000	Grand Valley # 31290	FEE	NENW	28	5S	95W
N. Parachute EF05C-29 I30 595	05-045-15343-0000	Grand Valley # 31290	FEE	NESE	30	5S	95W
N. Parachute EF05C-32 I30A 595	05-045-15049-0000	Grand Valley # 31290	FEE	NESE	30	5S	95W
N. Parachute EF05C E19 595	05-045-11712-0000	Grand Valley # 31290	FEE	Lot 5	19	5S	95W
N. Parachute EF05D-19 L19 595	05-045-14495-0000	Grand Valley # 31290	FED -COC 44963	Lot 9	19	5S	95W
N. Parachute EF05D-20 C29 595	05-045-15557-0000	Grand Valley # 31290	FEE	NENW	29	5S	95W
N. Parachute EF05D-22 D27 595	05-045-11719-0000	Grand Valley # 31290	FEE	NWNW	27	5S	95W
N. Parachute EF05D-29 I30 595	05-045-15354-0000	Grand Valley # 31290	FEE	NESE	30	5S	95W
N. Parachute EF05D-32 I30A 595	05-045-15106-0000	Grand Valley # 31290	FEE	NESE	30	5S	95W
N. Parachute EF05D C27 595	05-045-10432-0000	Grand Valley # 31290	FEE	NENW	27	5S	95W

SOURCES FOR PRODUCED WATER

As of December 20, 2011

The following wells are sources of produced water:

NON-UNIT Wells:

Well Name and Number	Well API Number	Field	Mineral Owner - Lease #	Qtr-Qtr / Lot	Sec	Twp	Rng
N. Parachute EF05D D28 595	05-045-12377-0000	Grand Valley # 31290	FEE	NWNW	28	5S	95W
N. Parachute EF05D E19 595	05-045-11674-0000	Grand Valley # 31290	FEE	Lot 5	19	5S	95W
N. Parachute EF06A-22 D27A 595	05-045-17646-0000	Grand Valley # 31290	FEE	NWNW	27	5S	95W
N. Parachute EF06A-28 C28A 595	05-045-18081-0000	Grand Valley # 31290	FEE	NENW	28	5S	95W
N. Parachute EF06A-29 G29 595	05-045-19965-0000	Grand Valley # 31290	FEE	SWNE	29	5S	95W
N. Parachute EF06A-30 I30A 595	05-045-15099-0000	Grand Valley # 31290	FEE	NESE	30	5S	95W
N. Parachute EF06A-31 N30 595	05-045-15204-0000	Grand Valley # 31290	FEE	Lot 15	30	5S	95W
N. Parachute EF06A-32 L29 595	05-045-11645-0000	Grand Valley # 31290	FEE	NWSW	29	5S	95W
N. Parachute EF06A D19B 595	05-045-16984-0000	Grand Valley # 31290	FEE	Lot 2	19	5S	95W
N. Parachute EF06B-22 D27 595	05-045-11728-0000	Grand Valley # 31290	FEE	NWNW	27	5S	95W
N. Parachute EF06B-32 L29 595	05-045-11636-0000	Grand Valley # 31290	FEE	NWSW	29	5S	95W
N. Parachute EF06B C27A 595	05-045-11577-0000	Grand Valley # 31290	FEE	NENW	27	5S	95W
N. Parachute EF06B C28 595	05-045-11896-0000	Grand Valley # 31290	FEE	NENW	28	5S	95W
N. Parachute EF06B I30A 595	05-045-11277-0000	Grand Valley # 31290	FEE	NESE	30	5S	95W
N. Parachute EF06B L29 595	05-045-11642-0000	Grand Valley # 31290	FEE	NWSW	29	5S	95W
N. Parachute EF06B N30 595	05-045-11558-0000	Grand Valley # 31290	FEE	Lot 15	30	5S	95W
N. Parachute EF06C-22 D27A 595	05-045-17650-0000	Grand Valley # 31290	FEE	NWNW	27	5S	95W
N. Parachute EF06C-30 I30A 595	05-045-15100-0000	Grand Valley # 31290	FEE	NESE	30	5S	95W
N. Parachute EF06C-31 N30 595	05-045-15200-0000	Grand Valley # 31290	FEE	Lot 15	30	5S	95W
N. Parachute EF06C-32 L29 595	05-045-11635-0000	Grand Valley # 31290	FEE	NWSW	29	5S	95W
N. Parachute EF06C D19B 595	05-045-16969-0000	Grand Valley # 31290	FEE	Lot 2	19	5S	95W
N. Parachute EF06D-20 C29 595	05-045-15550-0000	Grand Valley # 31290	FEE	NENW	29	5S	95W
N. Parachute EF06D-22 D27 595	05-045-11722-0000	Grand Valley # 31290	FEE	NWNW	27	5S	95W
N. Parachute EF06D-28 C28A 595	05-045-18080-0000	Grand Valley # 31290	FEE	NENW	28	5S	95W

SOURCES FOR PRODUCED WATER

As of December 20, 2011

The following wells are sources of produced water:

NON-UNIT Wells:

Well Name and Number	Well API Number	Field	Mineral Owner - Lease #	Qtr-Qtr / Lot	Sec	Twp	Rng
N. Parachute EF06D-32 L29 595	05-045-11648-0000	Grand Valley # 31290	FEE	NWSW	29	5S	95W
N. Parachute EF06D C28 595	05-045-11459-0000	Grand Valley # 31290	FEE	NENW	28	5S	95W
N. Parachute EF06D D19 595	05-045-10110-0000	Grand Valley # 31290	FEE	Lot 2	19	5S	95W
N. Parachute EF06D D19B 595	05-045-16973-0000	Grand Valley # 31290	FEE	Lot 2	19	5S	95W
N. Parachute EF06D G29 595	05-045-11661-0000	Grand Valley # 31290	FEE	SWNE	29	5S	95W
N. Parachute EF06D I30A 595	05-045-11278-0000	Grand Valley # 31290	FEE	NESE	30	5S	95W
N. Parachute EF06D J27 595	05-045-13386-0000	Grand Valley # 31290	FEE	NWSE	27	5S	95W
N. Parachute EF06D L29 595	05-045-11643-0000	Grand Valley # 31290	FEE	NWSW	29	5S	95W
N. Parachute EF06D N30 595	05-045-11553-0000	Grand Valley # 31290	FEE	Lot 15	30	5S	95W
N. Parachute EF07A-20 C29 595	05-045-15489-0000	Grand Valley # 31290	FEE	NENW	29	5S	95W
N. Parachute EF07A-24 E19 595	05-045-14487-0000	Grand Valley # 31290	FEE	Lot 2	19	5S	95W
N. Parachute EF07A-28 C28 595	05-045-17590-0000	Grand Valley # 31290	FEE	NENW	28	5S	95W
N. Parachute EF07A-30 I30A 595	05-045-15101-0000	Grand Valley # 31290	FEE	NESE	30	5S	95W
N. Parachute EF07A-31 N30 595	05-045-15210-0000	Grand Valley # 31290	FEE	Lot 15	30	5S	95W
N. Parachute EF07B-20 C29 595	05-045-15490-0000	Grand Valley # 31290	FEE	NENW	29	5S	95W
N. Parachute EF07B-24 E19 595	05-045-14486-0000	Grand Valley # 31290	FEE	Lot 2	19	5S	95W
N. Parachute EF07B A28 595	05-045-10475-0000	Grand Valley # 31290	FEE	NENE	28	5S	95W
N. Parachute EF07B C27A 595	05-045-11581-0000	Grand Valley # 31290	FEE	NENW	27	5S	95W
N. Parachute EF07B D19A 595	05-045-12704-0000	Grand Valley # 31290	FEE	Lot 2	19	5S	95W
N. Parachute EF07B D19B 595	05-045-17478-0000	Grand Valley # 31290	FEE	Lot 2	19	5S	95W
N. Parachute EF07B G29 595	05-045-11660-0000	Grand Valley # 31290	FEE	SWNE	29	5S	95W
N. Parachute EF07B I30A 595	05-045-11279-0000	Grand Valley # 31290	FEE	NESE	30	5S	95W
N. Parachute EF07B N30 595	05-045-11556-0000	Grand Valley # 31290	FEE	Lot 15	30	5S	95W
N. Parachute EF07C-20 C29 595	05-045-15491-0000	Grand Valley # 31290	FEE	NENW	29	5S	95W

SOURCES FOR PRODUCED WATER

As of December 20, 2011

The following wells are sources of produced water:

NON-UNIT Wells:

Well Name and Number	Well API Number	Field	Mineral Owner - Lease #	Qtr-Qtr / Lot	Sec	Twp	Rng
N. Parachute EF07C-24 E19 595	05-045-14482-0000	Grand Valley # 31290	FEE	Lot 2	19	5S	95W
N. Parachute EF07C-28 C28 595	05-045-17597-0000	Grand Valley # 31290	FEE	NENW	28	5S	95W
N. Parachute EF07C-29 G29 595	05-045-19977-0000	Grand Valley # 31290	FEE	SWNE	29	5S	95W
N. Parachute EF07C-30 I30A 595	05-045-15102-0000	Grand Valley # 31290	FEE	NESE	30	5S	95W
N. Parachute EF07C-31 N30 595	05-045-15211-0000	Grand Valley # 31290	FEE	Lot 15	30	5S	95W
N. Parachute EF07C D19B 595	05-045-17480-0000	Grand Valley # 31290	FEE	Lot 2	19	5S	95W
N. Parachute EF07D-20 C29 595	05-045-15493-0000	Grand Valley # 31290	FEE	NENW	29	5S	95W
N. Parachute EF07D-24 E19 595	05-045-14483-0000	Grand Valley # 31290	FEE	Lot 2	19	5S	95W
N. Parachute EF07D-29 F29 595	05-045-16160-0000	Grand Valley # 31290	FEE	SENW	29	5S	95W
N. Parachute EF07D-31 N30 595	05-045-15203-0000	Grand Valley # 31290	FEE	Lot 15	30	5S	95W
N. Parachute EF07D A28 595	05-045-10697-0000	Grand Valley # 31290	FEE	NENE	28	5S	95W
N. Parachute EF07D D19B 595	05-045-16972-0000	Grand Valley # 31290	FEE	Lot 2	19	5S	95W
N. Parachute EF07D H29 595	05-045-10314-0000	Grand Valley # 31290	FEE	SENE	29	5S	95W
N. Parachute EF07D I30A 595	05-045-11280-0000	Grand Valley # 31290	FEE	NESE	30	5S	95W
N. Parachute EF07D J27 595	05-045-13476-0000	Grand Valley # 31290	FEE	NWSE	27	5S	95W
N. Parachute EF08A-24 E19 595	05-045-14719-0000	Grand Valley # 31290	FEE	Lot 2	19	5S	95W
N. Parachute EF08A-28 A28B 595	05-045-15264-0000	Grand Valley # 31290	FEE	NENE	28	5S	95W
N. Parachute EF08A-29 G29 595	05-045-19971-0000	Grand Valley # 31290	FEE	SWNE	29	5S	95W
N. Parachute EF08A-30 I30 595	05-045-15351-0000	Grand Valley # 31290	FEE	NESE	30	5S	95W
N. Parachute EF08A-31 N30 595	05-045-15208-0000	Grand Valley # 31290	FEE	Lot 15	30	5S	95W
N. Parachute EF08A-34 P27 595	05-045-20288-0000	Grand Valley # 31290	FEE	SESE	27	5S	95W
N. Parachute EF08B-24 E19 595	05-045-14480-0000	Grand Valley # 31290	FEE	Lot 2	19	5S	95W
N. Parachute EF08B-34 P27 595	05-045-20287-0000	Grand Valley # 31290	FEE	SESE	27	5S	95W
N. Parachute EF08B A28 595	05-045-10476-0000	Grand Valley # 31290	FEE	NENE	28	5S	95W

SOURCES FOR PRODUCED WATER

As of December 20, 2011

The following wells are sources of produced water:

NON-UNIT Wells:

Well Name and Number	Well API Number	Field	Mineral Owner - Lease #	Qtr-Qtr / Lot	Sec	Twp	Rng
N. Parachute EF08B C27A 595	05-045-11570-0000	Grand Valley # 31290	FEE	NENW	27	5S	95W
N. Parachute EF08B D19A 595	05-045-12711-0000	Grand Valley # 31290	FEE	Lot 2	19	5S	95W
N. Parachute EF08B D19B 595	05-045-16980-0000	Grand Valley # 31290	FEE	Lot 2	19	5S	95W
N. Parachute EF08B G29 595	05-045-13842-0000	Grand Valley # 31290	FEE	SWNE	29	5S	95W
N. Parachute EF08B I30 595	05-045-11251-0000	Grand Valley # 31290	FEE	NESE	30	5S	95W
N. Parachute EF08B N30 595	05-045-11551-0000	Grand Valley # 31290	FEE	Lot 15	30	5S	95W
N. Parachute EF08B P27 595	05-045-11175-0000	Grand Valley # 31290	FEE	SESE	27	5S	95W
N. Parachute EF08C-19 C29 595	05-045-15601-0000	Grand Valley # 31290	FEE	NENW	29	5S	95W
N. Parachute EF08C-24 E19 595	05-045-14488-0000	Grand Valley # 31290	FEE	Lot 2	19	5S	95W
N. Parachute EF08C-28 A28B 595	05-045-15265-0000	Grand Valley # 31290	FEE	NENE	28	5S	95W
N. Parachute EF08C-30 I30 595	05-045-15352-0000	Grand Valley # 31290	FEE	NESE	30	5S	95W
N. Parachute EF08C-31 N30 595	05-045-15209-0000	Grand Valley # 31290	FEE	Lot 15	30	5S	95W
N. Parachute EF08C D19B 595	05-045-16979-0000	Grand Valley # 31290	FEE	Lot 2	19	5S	95W
N. Parachute EF08D-24 E19 595	05-045-14481-0000	Grand Valley # 31290	FEE	Lot 2	19	5S	95W
N. Parachute EF08D-28 D27 595	05-045-11778-0000	Grand Valley # 31290	FEE	NWNW	27	5S	95W
N. Parachute EF08D-31 N30 595	05-045-15207-0000	Grand Valley # 31290	FEE	Lot 15	30	5S	95W
N. Parachute EF08D-34 P27 595	05-045-20282-0000	Grand Valley # 31290	FEE	SESE	27	5S	95W
N. Parachute EF08D G29 595	05-045-13843-0000	Grand Valley # 31290	FEE	SWNE	29	5S	95W
N. Parachute EF08D I30 595	05-045-11250-0000	Grand Valley # 31290	FEE	NESE	30	5S	95W
N. Parachute EF08E-34 P27 595	05-045-20315-0000	Grand Valley # 31290	FEE	SESE	27	5S	95W
N. Parachute EF08F-34 P27 595	05-045-20318-0000	Grand Valley # 31290	FEE	SESE	27	5S	95W
N. Parachute EF09A-21 D27A 595	05-045-17643-0000	Grand Valley # 31290	FEE	NWNW	27	5S	95W
N. Parachute EF09A-24 E19 595	05-045-14492-0000	Grand Valley # 31290	FEE	Lot 2	19	5S	95W
N. Parachute EF09A-28 C28 595	05-045-17596-0000	Grand Valley # 31290	FEE	NENW	28	5S	95W

SOURCES FOR PRODUCED WATER

As of December 20, 2011

The following wells are sources of produced water:

NON-UNIT Wells:

Well Name and Number	Well API Number	Field	Mineral Owner - Lease #	Qtr-Qtr / Lot	Sec	Twp	Rng
N. Parachute EF09A-29 G29 595	05-045-19970-0000	Grand Valley # 31290	FEE	SWNE	29	5S	95W
N. Parachute EF09B-21 D27 595	05-045-11721-0000	Grand Valley # 31290	FEE	NWNW	27	5S	95W
N. Parachute EF09B-22 D27 595	05-045-11729-0000	Grand Valley # 31290	FEE	NWNW	27	5S	95W
N. Parachute EF09B-28 D27 595	05-045-11790-0000	Grand Valley # 31290	FEE	NWNW	27	5S	95W
N. Parachute EF09B E19 595	05-045-11715-0000	Grand Valley # 31290	FEE	Lot 5	19	5S	96W
N. Parachute EF09B G29 595	05-045-11651-0000	Grand Valley # 31290	FEE	SWNE	29	5S	95W
N. Parachute EF09B H29A 595	05-045-11418-0000	Grand Valley # 31290	FEE	SENE	29	5S	95W
N. Parachute EF09C-21 D27A 595	05-045-17639-0000	Grand Valley # 31290	FEE	NWNW	27	5S	95W
N. Parachute EF09C-24 E19 595	05-045-14724-0000	Grand Valley # 31290	FEE	Lot 5	19	5S	95W
N. Parachute EF09C-28 C28 595	05-045-17599-0000	Grand Valley # 31290	FEE	NENW	28	5S	95W
N. Parachute EF09C-29 G29 595	05-045-19963-0000	Grand Valley # 31290	FEE	SWNE	29	5S	95W
N. Parachute EF09D-21 D27A 595	05-045-17651-0000	Grand Valley # 31290	FEE	NWNW	27	5S	95W
N. Parachute EF09D-27 P27 595	05-045-20323-0000	Grand Valley # 31290	FEE	SESE	27	5S	95W
N. Parachute EF09D-28 D27 595	05-045-11780-0000	Grand Valley # 31290	FEE	NWNW	27	5S	95W
N. Parachute EF09D C27A 595	05-045-11575-0000	Grand Valley # 31290	FEE	NENW	27	5S	95W
N. Parachute EF09D C28 595	05-045-11867-0000	Grand Valley # 31290	FEE	NENW	28	5S	95W
N. Parachute EF09D E19 595	05-045-11716-0000	Grand Valley # 31290	FEE	Lot 5	19	5S	95W
N. Parachute EF09D G29 595	05-045-13839-0000	Grand Valley # 31290	FEE	SWNE	29	5S	95W
N. Parachute EF09E-27 P27 595	05-045-20299-0000	Grand Valley # 31290	FEE	SESE	27	5S	95W
N. Parachute EF09F-27 P27 595	05-045-20292-0000	Grand Valley # 31290	FEE	SESE	27	5S	95W
N. Parachute EF10A-20 H29A 595	05-045-16064-0000	Grand Valley # 31290	FEE	SENE	29	5S	95W
N. Parachute EF10A-21 C28 595	05-045-17601-0000	Grand Valley # 31290	FEE	NENW	28	5S	95W
N. Parachute EF10A-24 E19 595	05-045-14491-0000	Grand Valley # 31290	FEE	Lot 2	19	5S	95W
N. Parachute EF10A-28 C28 595	05-045-17741-0000	Grand Valley # 31290	FEE	NENW	28	5S	95W

SOURCES FOR PRODUCED WATER

As of December 20, 2011

The following wells are sources of produced water:

NON-UNIT Wells:

Well Name and Number	Well API Number	Field	Mineral Owner - Lease #	Qtr-Qtr / Lot	Sec	Twp	Rng
N. Parachute EF10A-31 N30 595	05-045-15214-0000	Grand Valley # 31290	FEE	Lot 15	30	5S	95W
N. Parachute EF10A D19B 595	05-045-16976-0000	Grand Valley # 31290	FEE	Lot 2	19	5S	95W
N. Parachute EF10B-20 C29 595	05-045-15708-0000	Grand Valley # 31290	FEE	NENW	29	5S	95W
N. Parachute EF10B-21 C28 595	05-045-11875-0000	Grand Valley # 31290	FEE	NENW	28	5S	95W
N. Parachute EF10B-22 D27 595	05-045-11731-0000	Grand Valley # 31290	FEE	NWNW	27	5S	95W
N. Parachute EF10B-24 E19 595	05-045-14490-0000	Grand Valley # 31290	FEE	Lot 2	19	5S	95W
N. Parachute EF10B-29 F29 595	05-045-16166-0000	Grand Valley # 31290	FEE	SENW	29	5S	95W
N. Parachute EF10B-29 G29 595	05-045-19967-0000	Grand Valley # 31290	FEE	SWNE	29	5S	95W
N. Parachute EF10B C27A 595	05-045-11578-0000	Grand Valley # 31290	FEE	NENW	27	5S	95W
N. Parachute EF10B C28 595	05-045-11458-0000	Grand Valley # 31290	FEE	NENW	28	5S	95W
N. Parachute EF10B D19B 595	05-045-16975-0000	Grand Valley # 31290	FEE	Lot 2	19	5S	95W
N. Parachute EF10B G29 595	05-045-11679-0000	Grand Valley # 31290	FEE	SWNE	29	5S	95W
N. Parachute EF10C-20 H29A 595	05-045-16060-0000	Grand Valley # 31290	FEE	SENE	29	5S	95W
N. Parachute EF10C-21 C28 595	05-045-17602-0000	Grand Valley # 31290	FEE	NENW	28	5S	95W
N. Parachute EF10C-24 E19 595	05-045-14489-0000	Grand Valley # 31290	FEE	Lot 2	19	5S	95W
N. Parachute EF10C-28 C28 595	05-045-17595-0000	Grand Valley # 31290	FEE	NENW	28	5S	95W
N. Parachute EF10C D19B 595	05-045-16974-0000	Grand Valley # 31290	FEE	Lot 2	19	5S	95W
N. Parachute EF10D-21 C28 595	05-045-17589-0000	Grand Valley # 31290	FEE	NENW	28	5S	95W
N. Parachute EF10D-22 D27 595	05-045-11732-0000	Grand Valley # 31290	FEE	NWNW	27	5S	95W
N. Parachute EF10D-24 E19 595	05-045-14478-0000	Grand Valley # 31290	FEE	Lot 5	19	5S	95W
N. Parachute EF10D-28 C28 595	05-045-17594-0000	Grand Valley # 31290	FEE	NENW	28	5S	95W
N. Parachute EF10D-30 J30 595	05-045-11727-0000	Grand Valley # 31290	FED -COC 60234	NWSE	30	5S	95W
N. Parachute EF10D D19B 595	05-045-16970-0000	Grand Valley # 31290	FEE	Lot 2	19	5S	95W
N. Parachute EF10D G29 595	05-045-13840-0000	Grand Valley # 31290	FEE	SWNE	29	5S	95W

SOURCES FOR PRODUCED WATER

As of December 20, 2011

The following wells are sources of produced water:

NON-UNIT Wells:

Well Name and Number	Well API Number	Field	Mineral Owner - Lease #	Qtr-Qtr / Lot	Sec	Twp	Rng
N. Parachute EF10D H29A 595	05-045-11421-0000	Grand Valley # 31290	FEE	SENE	29	5S	95W
N. Parachute EF11A-22 D27A 595	05-045-17645-0000	Grand Valley # 31290	FEE	NWNW	27	5S	95W
N. Parachute EF11A-28 C28A 595	05-045-18075-0000	Grand Valley # 31290	FEE	NENW	28	5S	95W
N. Parachute EF11A-29 F29 595	05-045-16169-0000	Grand Valley # 31290	FEE	SENW	29	5S	95W
N. Parachute EF11A-31 N30 595	05-045-15212-0000	Grand Valley # 31290	FEE	Lot 15	30	5S	95W
N. Parachute EF11A D19B 595	05-045-17481-0000	Grand Valley # 31290	FEE	Lot 2	19	5S	95W
N. Parachute EF11B-21 C28 595	05-045-11873-0000	Grand Valley # 31290	FEE	NENW	28	5S	95W
N. Parachute EF11B-22 D27 595	05-045-11720-0000	Grand Valley # 31290	FEE	NWNW	27	5S	95W
N. Parachute EF11B-29 F29 595	05-045-16167-0000	Grand Valley # 31290	FEE	SENW	29	5S	95W
N. Parachute EF11B-30 J30 595	05-045-12179-0000	Grand Valley # 31290	FED -COC 60234	NWSE	30	5S	95W
N. Parachute EF11B-31 N30 595	05-045-15213-0000	Grand Valley # 31290	FEE	Lot 15	30	5S	95W
N. Parachute EF11B C28 595	05-045-11457-0000	Grand Valley # 31290	FEE	NENW	28	5S	95W
N. Parachute EF11B D19B 595	05-045-17475-0000	Grand Valley # 31290	FEE	Lot 2	19	5S	95W
N. Parachute EF11B D27 595	05-045-11745-0000	Grand Valley # 31290	FEE	NWNW	27	5S	95W
N. Parachute EF11C-22 D27A 595	05-045-17644-0000	Grand Valley # 31290	FEE	NWNW	27	5S	95W
N. Parachute EF11C D19B 595	05-045-17476-0000	Grand Valley # 31290	FEE	Lot 2	19	5S	95W
N. Parachute EF11C D31 595	05-045-15487-0000	Grand Valley # 31290	FEE	Lot 3	31	5S	95W
N. Parachute EF11D-20 C29 595	05-045-15494-0000	Grand Valley # 31290	FEE	NENW	29	5S	95W
N. Parachute EF11D-21 C28 595	05-045-11869-0000	Grand Valley # 31290	FEE	NENW	28	5S	95W
N. Parachute EF11D-22 D27 595	05-045-11724-0000	Grand Valley # 31290	FEE	NWNW	27	5S	95W
N. Parachute EF11D-27 P27 595	05-045-20290-0000	Grand Valley # 31290	FEE	SESE	27	5S	95W
N. Parachute EF11D-28 C28A 595	05-045-18079-0000	Grand Valley # 31290	FEE	NENW	28	5S	95W
N. Parachute EF11D-29 F29 595	05-045-16168-0000	Grand Valley # 31290	FEE	SENW	29	5S	95W
N. Parachute EF11D C28 595	05-045-11438-0000	Grand Valley # 31290	FEE	NENW	28	5S	95W

SOURCES FOR PRODUCED WATER

As of December 20, 2011

The following wells are sources of produced water:

NON-UNIT Wells:

Well Name and Number	Well API Number	Field	Mineral Owner - Lease #	Qtr-Qtr / Lot	Sec	Twp	Rng
N. Parachute EF11D D19B 595	05-045-17479-0000	Grand Valley # 31290	FEE	Lot 2	19	5S	95W
N. Parachute EF11D D31 595	05-045-14663-0000	Grand Valley # 31290	FEE	Lot 3	31	5S	95W
N. Parachute EF11D G29 595	05-045-11680-0000	Grand Valley # 31290	FEE	SWNE	29	5S	95W
N. Parachute EF11E-27 P27 595	05-045-20301-0000	Grand Valley # 31290	FEE	SESE	27	5S	95W
N. Parachute EF11F-27 P27 595	05-045-20286-0000	Grand Valley # 31290	FEE	SESE	27	5S	95W
N. Parachute EF12A-19 L19 595	05-045-13967-0000	Grand Valley # 31290	FED -COC 44963	Lot 9	19	5S	95W
N. Parachute EF12A-20 C29 595	05-045-15553-0000	Grand Valley # 31290	FEE	NENW	29	5S	95W
N. Parachute EF12A-22 D27A 595	05-045-17662-0000	Grand Valley # 31290	FEE	NWNW	27	5S	95W
N. Parachute EF12A-29 F29 595	05-045-16165-0000	Grand Valley # 31290	FEE	SENW	29	5S	95W
N. Parachute EF12A D31 595	05-045-14664-0000	Grand Valley # 31290	FEE	Lot 3	31	5S	95W
N. Parachute EF12B-19 L19 595	05-045-13966-0000	Grand Valley # 31290	FED -COC 44963	Lot 9	19	5S	95W
N. Parachute EF12B-20 C29 595	05-045-15552-0000	Grand Valley # 31290	FEE	NENW	29	5S	95W
N. Parachute EF12B-22 D27 595	05-045-11718-0000	Grand Valley # 31290	FEE	NWNW	27	5S	95W
N. Parachute EF12B-28 C28A 595	05-045-18084-0000	Grand Valley # 31290	FEE	NENW	28	5S	95W
N. Parachute EF12B C28 595	05-045-11870-0000	Grand Valley # 31290	FEE	NENW	28	5S	95W
N. Parachute EF12B D27 595	05-045-11747-0000	Grand Valley # 31290	FEE	NWNW	27	5S	95W
N. Parachute EF12B-DX D31 595	05-045-15486-0000	Grand Valley # 31290	FEE	Lot 3	31	5S	95W
N. Parachute EF12B G29 595	05-045-14260-0000	Grand Valley # 31290	FEE	SWNE	29	5S	95W
N. Parachute EF12B L29 595	05-045-11639-0000	Grand Valley # 31290	FEE	NWSW	29	5S	95W
N. Parachute EF12C-20 C29 595	05-045-15551-0000	Grand Valley # 31290	FEE	NENW	29	5S	95W
N. Parachute EF12C-28 C28A 595	05-045-18085-0000	Grand Valley # 31290	FEE	NENW	28	5S	95W
N. Parachute EF12C-29 F29 595	05-045-16164-0000	Grand Valley # 31290	FEE	SENW	29	5S	95W
N. Parachute EF12C D31 595	05-045-14659-0000	Grand Valley # 31290	FEE	Lot 3	31	5S	95W
N. Parachute EF12D-20 C29 595	05-045-15597-0000	Grand Valley # 31290	FEE	NENW	29	5S	95W

SOURCES FOR PRODUCED WATER

As of December 20, 2011

The following wells are sources of produced water:

NON-UNIT Wells:

Well Name and Number	Well API Number	Field	Mineral Owner - Lease #	Qtr-Qtr / Lot	Sec	Twp	Rng
N. Parachute EF12D-22 D27A 595	05-045-17641-0000	Grand Valley # 31290	FEE	NWNW	27	5S	95W
N. Parachute EF12D-29 I30 595	05-045-15344-0000	Grand Valley # 31290	FEE	NESE	30	5S	95W
N. Parachute EF12D A28B 595	05-045-10472-0000	Grand Valley # 31290	FEE	NENE	28	5S	95W
N. Parachute EF12D C28 595	05-045-11895-0000	Grand Valley # 31290	FEE	NENW	28	5S	95W
N. Parachute EF12D D27 595	05-045-11866-0000	Grand Valley # 31290	FEE	NWNW	27	5S	95W
N. Parachute EF12D D28 595	05-045-11625-0000	Grand Valley # 31290	FEE	NWNW	28	5S	95W
N. Parachute EF12D D31 595	05-045-14660-0000	Grand Valley # 31290	FEE	Lot 3	31	5S	95W
N. Parachute EF13A-27 D27 595	05-045-11791-0000	Grand Valley # 31290	FEE	NWNW	27	5S	95W
N. Parachute EF13A-29 I30 595	05-045-15345-0000	Grand Valley # 31290	FEE	NESE	30	5S	95W
N. Parachute EF13B-22 D27A 595	05-045-17642-0000	Grand Valley # 31290	FEE	NWNW	27	5S	95W
N. Parachute EF13B C28 595	05-045-11871-0000	Grand Valley # 31290	FEE	NENW	28	5S	95W
N. Parachute EF13B D27 595	05-045-11746-0000	Grand Valley # 31290	FEE	NWNW	27	5S	95W
N. Parachute EF13B D28 595	05-045-11624-0000	Grand Valley # 31290	FEE	NWNW	28	5S	95W
N. Parachute EF13B-DX A28B 595	05-045-10723-0000	Grand Valley # 31290	FEE	NENE	28	5S	95W
N. Parachute EF13B L29 595	05-045-11638-0000	Grand Valley # 31290	FEE	NWSW	29	5S	95W
N. Parachute EF13C-22 D27A 595	05-045-17652-0000	Grand Valley # 31290	FEE	NWNW	27	5S	95W
N. Parachute EF13C-29 I30 595	05-045-15347-0000	Grand Valley # 31290	FEE	NESE	30	5S	95W
N. Parachute EF13D-28 G29 595	05-045-19968-0000	Grand Valley # 31290	FEE	SWNE	29	5S	95W
N. Parachute EF13D A28B 595	05-045-10471-0000	Grand Valley # 31290	FEE	NENE	28	5S	95W
N. Parachute EF13D C28 595	05-045-11865-0000	Grand Valley # 31290	FEE	NENW	28	5S	95W
N. Parachute EF13D D28 595	05-045-11634-0000	Grand Valley # 31290	FEE	NWNW	28	5S	95W
N. Parachute EF13D L29 595	05-045-11647-0000	Grand Valley # 31290	FEE	NWSW	29	5S	95W
N. Parachute EF14A-22 D27A 595	05-045-17649-0000	Grand Valley # 31290	FEE	NWNW	27	5S	95W
N. Parachute EF14A-27 P27 595	05-045-20291-0000	Grand Valley # 31290	FEE	SESE	27	5S	95W

SOURCES FOR PRODUCED WATER

As of December 20, 2011

The following wells are sources of produced water:

NON-UNIT Wells:

Well Name and Number	Well API Number	Field	Mineral Owner - Lease #	Qtr-Qtr / Lot	Sec	Twp	Rng
N. Parachute EF14A-29 F29 595	05-045-16170-0000	Grand Valley # 31290	FEE	SENW	29	5S	95W
N. Parachute EF14A D19B 595	05-045-16977-0000	Grand Valley # 31290	FEE	Lot 2	19	5S	95W
N. Parachute EF14A D31 595	05-045-14661-0000	Grand Valley # 31290	FEE	Lot 3	31	5S	95W
N. Parachute EF14B-22 D27 595	05-045-11730-0000	Grand Valley # 31290	FEE	NWNW	27	5S	95W
N. Parachute EF14B-27 P27 595	05-045-20293-0000	Grand Valley # 31290	FEE	SESE	27	5S	95W
N. Parachute EF14B-28 C28A 595	05-045-18083-0000	Grand Valley # 31290	FEE	NENW	28	5S	95W
N. Parachute EF14B-29 F29 595	05-045-16171-0000	Grand Valley # 31290	FEE	SENW	29	5S	95W
N. Parachute EF14B C28 595	05-045-11872-0000	Grand Valley # 31290	FEE	NENW	28	5S	95W
N. Parachute EF14B D19B 595	05-045-17477-0000	Grand Valley # 31290	FEE	Lot 2	19	5S	95W
N. Parachute EF14B D27 595	05-045-11748-0000	Grand Valley # 31290	FEE	NWNW	27	5S	95W
N. Parachute EF14B D28 595	05-045-11626-0000	Grand Valley # 31290	FEE	NWNW	28	5S	95W
N. Parachute EF14B D31 595	05-045-14665-0000	Grand Valley # 31290	FEE	Lot 3	31	5S	95W
N. Parachute EF14C-29 F29 595	05-045-16172-0000	Grand Valley # 31290	FEE	SENW	29	5S	95W
N. Parachute EF14C-30 J30 595	05-045-12180-0000	Grand Valley # 31290	FED -COC 60234	NWSE	30	5S	95W
N. Parachute EF14C D19B 595	05-045-16971-0000	Grand Valley # 31290	FEE	Lot 2	19	5S	95W
N. Parachute EF14D-19 I30A 595	05-045-15107-0000	Grand Valley # 31290	FEE	NESE	30	5S	95W
N. Parachute EF14D-21 C28 595	05-045-11868-0000	Grand Valley # 31290	FEE	NENW	28	5S	95W
N. Parachute EF14D-27 P27 595	05-045-20319-0000	Grand Valley # 31290	FEE	SESE	27	5S	95W
N. Parachute EF14D-28 C28A 595	05-045-18082-0000	Grand Valley # 31290	FEE	NENW	28	5S	95W
N. Parachute EF14D C27 595	05-045-10430-0000	Grand Valley # 31290	FEE	NENW	27	5S	95W
N. Parachute EF14D C28 595	05-045-11456-0000	Grand Valley # 31290	FEE	NENW	28	5S	95W
N. Parachute EF14D G29 595	05-045-11657-0000	Grand Valley # 31290	FEE	SWNE	29	5S	95W
N. Parachute EF14E-27 P27 595	05-045-20317-0000	Grand Valley # 31290	FEE	SESE	27	5S	95W
N. Parachute EF14F-27 P27 595	05-045-20283-0000	Grand Valley # 31290	FEE	SESE	27	5S	95W

SOURCES FOR PRODUCED WATER

As of December 20, 2011

The following wells are sources of produced water:

NON-UNIT Wells:

Well Name and Number	Well API Number	Field	Mineral Owner - Lease #	Qtr-Qtr / Lot	Sec	Twp	Rng
N. Parachute EF15A-28 C28 595	05-045-17598-0000	Grand Valley # 31290	FEE	NENW	28	5S	95W
N. Parachute EF15A-29 F29 595	05-045-16162-0000	Grand Valley # 31290	FEE	SENW	29	5S	95W
N. Parachute EF15A D19B 595	05-045-16978-0000	Grand Valley # 31290	FEE	Lot 2	19	5S	95W
N. Parachute EF15B-20 H29A 595	05-045-16062-0000	Grand Valley # 31290	FEE	SENE	29	5S	95W
N. Parachute EF15B-21 C28 595	05-045-17588-0000	Grand Valley # 31290	FEE	NENW	28	5S	95W
N. Parachute EF15B-22 D27 595	05-045-14335-0000	Grand Valley # 31290	FEE	NWNW	27	5S	95W
N. Parachute EF15B-29 F29 595	05-045-16163-0000	Grand Valley # 31290	FEE	SENW	29	5S	95W
N. Parachute EF15B A28 595	05-045-10703-0000	Grand Valley # 31290	FEE	NENE	28	5S	95W
N. Parachute EF15B C28 595	05-045-11455-0000	Grand Valley # 31290	FEE	NENW	28	5S	95W
N. Parachute EF15B D19B 595	05-045-16853-0000	Grand Valley # 31290	FEE	Lot 2	19	5S	95W
N. Parachute EF15B G29 595	05-045-11659-0000	Grand Valley # 31290	FEE	SWNE	29	5S	95W
N. Parachute EF15B H29A 595	05-045-11415-0000	Grand Valley # 31290	FEE	SENE	29	5S	95W
N. Parachute EF15C-19 I30A 595	05-045-15060-0000	Grand Valley # 31290	FEE	NESE	30	5S	95W
N. Parachute EF15C-28 C28 595	05-045-17593-0000	Grand Valley # 31290	FEE	NENW	28	5S	95W
N. Parachute EF15D-19 I30A 595	05-045-15059-0000	Grand Valley # 31290	FEE	NESE	30	5S	95W
N. Parachute EF15D-20 H29A 595	05-045-16058-0000	Grand Valley # 31290	FEE	SENE	29	5S	95W
N. Parachute EF15D A28 595	05-045-10699-0000	Grand Valley # 31290	FEE	NENE	28	5S	95W
N. Parachute EF15D C27 595	05-045-10429-0000	Grand Valley # 31290	FEE	NENW	27	5S	95W
N. Parachute EF15D C28 595	05-045-11437-0000	Grand Valley # 31290	FEE	NENW	28	5S	95W
N. Parachute EF15D G29 595	05-045-11658-0000	Grand Valley # 31290	FEE	SWNE	29	5S	95W
N. Parachute EF15D H29A 595	05-045-11420-0000	Grand Valley # 31290	FEE	SENE	29	5S	95W
N. Parachute EF16A-21 A28B 595	05-045-10473-0000	Grand Valley # 31290	FEE	NENE	28	5S	95W
N. Parachute EF16A-24 E19 595	05-045-14725-0000	Grand Valley # 31290	FEE	Lot 5	19	5S	95W
N. Parachute EF16A-27 P27 595	05-045-20300-0000	Grand Valley # 31290	FEE	SESE	27	5S	95W

SOURCES FOR PRODUCED WATER

As of December 20, 2011

The following wells are sources of produced water:

NON-UNIT Wells:

Well Name and Number	Well API Number	Field	Mineral Owner - Lease #	Qtr-Qtr / Lot	Sec	Twp	Rng
N. Parachute EF16A-28 C28 595	05-045-17600-0000	Grand Valley # 31290	FEE	NENW	28	5S	95W
N. Parachute EF16A-29 G29 595	05-045-19966-0000	Grand Valley # 31290	FEE	SWNE	29	5S	95W
N. Parachute EF16A-30 I30A 595	05-045-15047-0000	Grand Valley # 31290	FEE	NESE	30	5S	95W
N. Parachute EF16B-21 A28B 595	05-045-10726-0000	Grand Valley # 31290	FEE	NENE	28	5S	95W
N. Parachute EF16B-27 P27 595	05-045-20320-0000	Grand Valley # 31290	FEE	SESE	27	5S	95W
N. Parachute EF16B-28 D27 595	05-045-11744-0000	Grand Valley # 31290	FEE	NWNW	27	5S	95W
N. Parachute EF16B C27A 595	05-045-11576-0000	Grand Valley # 31290	FEE	NENW	27	5S	95W
N. Parachute EF16B G29 595	05-045-11655-0000	Grand Valley # 31290	FEE	SWNE	29	5S	95W
N. Parachute EF16B H29A 595	05-045-11417-0000	Grand Valley # 31290	FEE	SENE	29	5S	95W
N. Parachute EF16B I30 595	05-045-11248-0000	Grand Valley # 31290	FEE	NESE	30	5S	95W
N. Parachute EF16B P27 595	05-045-11309-0000	Grand Valley # 31290	FEE	SESE	27	5S	95W
N. Parachute EF16C-19 I30 595	05-045-15341-0000	Grand Valley # 31290	FEE	NESE	30	5S	95W
N. Parachute EF16C-21 A28B 595	05-045-10470-0000	Grand Valley # 31290	FEE	NENE	28	5S	95W
N. Parachute EF16C-27 P27 595	05-045-20294-0000	Grand Valley # 31290	FEE	SESE	27	5S	95W
N. Parachute EF16C-29 G29 595	05-045-19978-0000	Grand Valley # 31290	FEE	SWNE	29	5S	95W
N. Parachute EF16C-30 I30A 595	05-045-15103-0000	Grand Valley # 31290	FEE	NESE	30	5S	95W
N. Parachute EF16D-19 I30 595	05-045-15356-0000	Grand Valley # 31290	FEE	NESE	30	5S	95W
N. Parachute EF16D-20 H29A 595	05-045-16063-0000	Grand Valley # 31290	FEE	SENE	29	5S	95W
N. Parachute EF16D-21 A28B 595	05-045-10725-0000	Grand Valley # 31290	FEE	NENE	28	5S	95W
N. Parachute EF16D-27 P27 595	05-045-20295-0000	Grand Valley # 31290	FEE	SESE	27	5S	95W
N. Parachute EF16D C27A 595	05-045-11579-0000	Grand Valley # 31290	FEE	NENW	27	5S	95W
N. Parachute EF16D G29 595	05-045-11653-0000	Grand Valley # 31290	FEE	SWNE	29	5S	95W
N. Parachute EF16D H29A 595	05-045-11414-0000	Grand Valley # 31290	FEE	SENE	29	5S	95W
N. Parachute EF16D I30 595	05-045-11249-0000	Grand Valley # 31290	FEE	NESE	30	5S	95W

SOURCES FOR PRODUCED WATER

As of December 20, 2011

The following wells are sources of produced water:

NON-UNIT Wells:

Well Name and Number	Well API Number	Field	Mineral Owner - Lease #	Qtr-Qtr / Lot	Sec	Twp	Rng
N. Parachute EF16E-27 P27 595	05-045-20296-0000	Grand Valley # 31290	FEE	SESE	27	5S	95W
N. Parachute EF16F-27 P27 595	05-045-20285-0000	Grand Valley # 31290	FEE	SESE	27	5S	95W
N. Parachute EFH320-10N C29 595	05-045-15492-0000	Grand Valley # 31290	FEE	NENW	29	5S	95W
N. Parachute EFH320-8N C29 595	05-045-15488-0000	Grand Valley # 31290	FEE	NENW	29	5S	95W
N. Parachute EMF01A-20 F17 595	05-045-20576-0000	Grand Valley # 31290	FEE	SENW	17	5S	95W
N. Parachute EMF01B-20 F17 595	05-045-20570-0000	Grand Valley # 31290	FEE	SENW	17	5S	95W
N. Parachute EMF01C-20 F17 595	05-045-20569-0000	Grand Valley # 31290	FEE	SENW	17	5S	95W
N. Parachute EMF01D-20 F17 595	05-045-20583-0000	Grand Valley # 31290	FEE	SENW	17	5S	95W
N. Parachute EMF10D-17 F17 595	05-045-20582-0000	Grand Valley # 31290	FEE	SENW	17	5S	95W
N. Parachute EMF13B-16 F17 595	05-045-20575-0000	Grand Valley # 31290	FEE	SENW	17	5S	95W
N. Parachute EMF13D-16 F17 595	05-045-20594-0000	Grand Valley # 31290	FEE	SENW	17	5S	95W
N. Parachute EMF14B-17 F17 595	05-045-20598-0000	Grand Valley # 31290	FEE	SENW	17	5S	95W
N. Parachute EMF14C-17 F17 595	05-045-20593-0000	Grand Valley # 31290	FEE	SENW	17	5S	95W
N. Parachute EMF14D-17 F17 595	05-045-20600-0000	Grand Valley # 31290	FEE	SENW	17	5S	95W
N. Parachute EMF15A-17 F17 595	05-045-20599-0000	Grand Valley # 31290	FEE	SENW	17	5S	95W
N. Parachute EMF15B-17 F17 595	05-045-20601-0000	Grand Valley # 31290	FEE	SENW	17	5S	95W
N. Parachute EMF15C-17 F17 595	05-045-20604-0000	Grand Valley # 31290	FEE	SENW	17	5S	95W
N. Parachute EMF16B-17 F17 595	05-045-20602-0000	Grand Valley # 31290	FEE	SENW	17	5S	95W
N. Parachute EMF16C-17 F17 595	05-045-20597-0000	Grand Valley # 31290	FEE	SENW	17	5S	95W
N. Parachute EMF16D-17 F17 595	05-045-20596-0000	Grand Valley # 31290	FEE	SENW	17	5S	95W
N. Parachute MF01A C28 696	05-045-15461-0000	Grand Valley # 31290	FEE	Lot 3	28	6S	96W
N. Parachute MF01B C28 696	05-045-15466-0000	Grand Valley # 31290	FEE	Lot 3	28	6S	96W
N. Parachute MF01C-4 C04 696	05-045-15766-0000	Grand Valley # 31290	FEE	Lot 1	04	6S	96W
N. Parachute MF01C C04 696	05-045-11828-0000	Grand Valley # 31290	FEE	Lot 1	4	6S	96W

SOURCES FOR PRODUCED WATER

As of December 20, 2011

The following wells are sources of produced water:

NON-UNIT Wells:

Well Name and Number	Well API Number	Field	Mineral Owner - Lease #	Qtr-Qtr / Lot	Sec	Twp	Rng
N. Parachute MF01C C28 696	05-045-15463-0000	Grand Valley # 31290	FEE	Lot 3	28	6S	96W
N. Parachute MF01D-9 O04 696	05-045-18803-0000	Grand Valley # 31290	FEE	Lot 9	4	6S	96W
N. Parachute MF01D C28 696	05-045-15462-0000	Grand Valley # 31290	FEE	Lot 3	28	6S	96W
N. Parachute MF02A-9 O04 696	05-045-18815-0000	Grand Valley # 31290	FEE	Lot 9	4	6S	96W
N. Parachute MF02A C28 696	05-045-15464-0000	Grand Valley # 31290	FEE	Lot 3	28	6S	96W
N. Parachute MF02A D09A 696	05-045-12210-0000	Grand Valley # 31290	FEE	Lot 4	9	6S	96W
N. Parachute MF02B-16 H17 696	05-045-18691-0000	Grand Valley # 31290	FEE	Lot 7	17	6S	96W
N. Parachute MF02B-4 C04 696	05-045-15772-0000	Grand Valley # 31290	FEE	Lot 1	04	6S	96W
N. Parachute MF02B-9 D09A 696	05-045-16299-0000	Grand Valley # 31290	FEE	Lot 4	9	6S	96W
N. Parachute MF02B C28 696	05-045-15460-0000	Grand Valley # 31290	FEE	Lot 3	28	6S	96W
N. Parachute MF02C-16 H17 696	05-045-18694-0000	Grand Valley # 31290	FEE	Lot 7	17	6S	96W
N. Parachute MF02C-4 C04 696	05-045-15770-0000	Grand Valley # 31290	FEE	Lot 1	04	6S	96W
N. Parachute MF02C-9 E09 696	05-045-18867-0000	Grand Valley # 31290	FEE	SWNW	9	6S	96W
N. Parachute MF02C C04 696	05-045-11834-0000	Grand Valley # 31290	FEE	Lot 1	4	6S	96W
N. Parachute MF02C C28 696	05-045-15467-0000	Grand Valley # 31290	FEE	Lot 3	28	6S	96W
N. Parachute MF02C D09A 696	05-045-12211-0000	Grand Valley # 31290	FEE	Lot 4	9	6S	96W
N. Parachute MF02D-16 H17 696	05-045-18706-0000	Grand Valley # 31290	FEE	Lot 7	17	6S	96W
N. Parachute MF02D C28 696	05-045-15465-0000	Grand Valley # 31290	FEE	Lot 3	28	6S	96W
N. Parachute MF03A-9 D09A 696	05-045-16301-0000	Grand Valley # 31290	FEE	Lot 4	9	6S	96W
N. Parachute MF03A C04 696	05-045-11832-0000	Grand Valley # 31290	FEE	Lot 1	4	6S	96W
N. Parachute MF03B-16 H17 696	05-045-18693-0000	Grand Valley # 31290	FEE	Lot 7	17	6S	96W
N. Parachute MF03C-16 H17 696	05-045-18692-0000	Grand Valley # 31290	FEE	Lot 7	17	6S	96W
N. Parachute MF03C-4 C04 696	05-045-15769-0000	Grand Valley # 31290	FEE	Lot 1	04	6S	96W
N. Parachute MF03C-9 D09A 696	05-045-16300-0000	Grand Valley # 31290	FEE	Lot 4	9	6S	96W

SOURCES FOR PRODUCED WATER

As of December 20, 2011

The following wells are sources of produced water:

NON-UNIT Wells:

Well Name and Number	Well API Number	Field	Mineral Owner - Lease #	Qtr-Qtr / Lot	Sec	Twp	Rng
N. Parachute MF03D-16 H17 696	05-045-18695-0000	Grand Valley # 31290	FEE	Lot 7	17	6S	96W
N. Parachute MF03D-9 D09A 696	05-045-16302-0000	Grand Valley # 31290	FEE	Lot 4	9	6S	96W
N. Parachute MF04A-16 H17 696	05-045-18696-0000	Grand Valley # 31290	FEE	Lot 7	17	6S	96W
N. Parachute MF04A-9 D09A 696	05-045-16305-0000	Grand Valley # 31290	FEE	Lot 4	9	6S	96W
N. Parachute MF04B-3 C04 696	05-045-15768-0000	Grand Valley # 31290	FEE	Lot 1	04	6S	96W
N. Parachute MF04C-9 D09A 696	05-045-16306-0000	Grand Valley # 31290	FEE	Lot 4	9	6S	96W
N. Parachute MF04D-9 D09A 696	05-045-16304-0000	Grand Valley # 31290	FEE	Lot 4	9	6S	96W
N. Parachute MF04D C04 696	05-045-11835-0000	Grand Valley # 31290	FEE	Lot 1	4	6S	96W
N. Parachute MF05A-16 H17 696	05-045-18698-0000	Grand Valley # 31290	FEE	Lot 7	17	6S	96W
N. Parachute MF05B-9 D09A 696	05-045-17760-0000	Grand Valley # 31290	FEE	Lot 4	9	6S	96W
N. Parachute MF05B D09A 696	05-045-12205-0000	Grand Valley # 31290	FEE	Lot 4	9	6S	96W
N. Parachute MF05C-3 O04 696	05-045-18808-0000	Grand Valley # 31290	FEE	Lot 9	4	6S	96W
N. Parachute MF05D-16 H17 696	05-045-18697-0000	Grand Valley # 31290	FEE	Lot 7	17	6S	96W
N. Parachute MF05D-9 D09A 696	05-045-17759-0000	Grand Valley # 31290	FEE	Lot 4	9	6S	96W
N. Parachute MF06A-3 O04 696	05-045-18798-0000	Grand Valley # 31290	FEE	Lot 9	4	6S	96W
N. Parachute MF06A-4 C04 696	05-045-15771-0000	Grand Valley # 31290	FEE	Lot 1	04	6S	96W
N. Parachute MF06B-16 H17 696	05-045-18705-0000	Grand Valley # 31290	FEE	Lot 7	17	6S	96W
N. Parachute MF06B-3 O04 696	05-045-18809-0000	Grand Valley # 31290	FEE	Lot 9	4	6S	96W
N. Parachute MF06B-4 C04 696	05-045-12249-0000	Grand Valley # 31290	FEE	Lot 1	4	6S	96W
N. Parachute MF06B-9 D09A 696	05-045-17757-0000	Grand Valley # 31290	FEE	Lot 4	9	6S	96W
N. Parachute MF06C-16 H17 696	05-045-18704-0000	Grand Valley # 31290	FEE	Lot 7	17	6S	96W
N. Parachute MF06C-3 O04 696	05-045-18795-0000	Grand Valley # 31290	FEE	Lot 9	4	6S	96W
N. Parachute MF06C-4 C04 696	05-045-11831-0000	Grand Valley # 31290	FEE	Lot 1	4	6S	96W
N. Parachute MF06C-9 D09A 696	05-045-17758-0000	Grand Valley # 31290	FEE	Lot 4	9	6S	96W

SOURCES FOR PRODUCED WATER

As of December 20, 2011

The following wells are sources of produced water:

NON-UNIT Wells:

Well Name and Number	Well API Number	Field	Mineral Owner - Lease #	Qtr-Qtr / Lot	Sec	Twp	Rng
N. Parachute MF06C D09A 696	05-045-12206-0000	Grand Valley # 31290	FEE	Lot 4	9	6S	96W
N. Parachute MF06D-16 H17 696	05-045-18700-0000	Grand Valley # 31290	FEE	Lot 7	17	6S	96W
N. Parachute MF06D-3 O04 696	05-045-18807-0000	Grand Valley # 31290	FEE	Lot 9	4	6S	96W
N. Parachute MF06D-4 N04 696	05-045-17859-0000	Grand Valley # 31290	FEE	Lot 10	4	6S	96W
N. Parachute MF06E-3 O04 696	05-045-18797-0000	Grand Valley # 31290	FEE	Lot 9	4	6S	96W
N. Parachute MF07A-4 C04 696	05-045-11827-0000	Grand Valley # 31290	FEE	Lot 1	4	6S	96W
N. Parachute MF07A D09A 696	05-045-12207-0000	Grand Valley # 31290	FEE	Lot 4	9	6S	96W
N. Parachute MF07B-16 H17 696	05-045-18699-0000	Grand Valley # 31290	FEE	SENE	17	6S	96W
N. Parachute MF07B-4 N04 696	05-045-18280-0000	Grand Valley # 31290	FEE	Lot 10	4	6S	96W
N. Parachute MF07C-16 H17 696	05-045-18703-0000	Grand Valley # 31290	FEE	Lot 7	17	6S	96W
N. Parachute MF07C-4 C04 696	05-045-11838-0000	Grand Valley # 31290	FEE	Lot 1	4	6S	96W
N. Parachute MF07C D09A 696	05-045-12208-0000	Grand Valley # 31290	FEE	Lot 4	9	6S	96W
N. Parachute MF07C E09 696	05-045-14996-0000	Grand Valley # 31290	FEE	SWNW	9	6S	96W
N. Parachute MF07D-9 E09 696	05-045-18886-0000	Grand Valley # 31290	FEE	SWNW	9	6S	96W
N. Parachute MF08A C04 696	05-045-11829-0000	Grand Valley # 31290	FEE	Lot 1	4	6S	96W
N. Parachute MF08B-9 O04 696	05-045-18819-0000	Grand Valley # 31290	FEE	Lot 9	4	6S	96W
N. Parachute MF08C C04 696	05-045-11833-0000	Grand Valley # 31290	FEE	Lot 1	4	6S	96W
N. Parachute MF09A N04 696	05-045-12318-0000	Grand Valley # 31290	FEE	Lot 10	4	6S	96W
N. Parachute MF09C N04 696	05-045-12321-0000	Grand Valley # 31290	FEE	Lot 10	4	6S	96W
N. Parachute MF10A-21 C28 696	05-045-14552-0000	Grand Valley # 31290	FEE	Lot 3	28	6S	96W
N. Parachute MF10A-4 N04 696	05-045-17863-0000	Grand Valley # 31290	FEE	Lot 10	4	6S	96W
N. Parachute MF10A E09 696	05-045-14992-0000	Grand Valley # 31290	FEE	SWNW	9	6S	96W
N. Parachute MF10B-21 C28 696	05-045-14551-0000	Grand Valley # 31290	FEE	Lot 3	28	6S	96W
N. Parachute MF10B E09 696	05-045-14993-0000	Grand Valley # 31290	FEE	SWNW	9	6S	96W

SOURCES FOR PRODUCED WATER

As of December 20, 2011

The following wells are sources of produced water:

NON-UNIT Wells:

Well Name and Number	Well API Number	Field	Mineral Owner - Lease #	Qtr-Qtr / Lot	Sec	Twp	Rng
N. Parachute MF10C-21 C28 696	05-045-14550-0000	Grand Valley # 31290	FEE	Lot 3	28	6S	96W
N. Parachute MF10C-4 N04 696	05-045-17861-0000	Grand Valley # 31290	FEE	Lot 10	4	6S	96W
N. Parachute MF10C E09 696	05-045-14994-0000	Grand Valley # 31290	FEE	SWNW	9	6S	96W
N. Parachute MF10C N04 696	05-045-12325-0000	Grand Valley # 31290	FEE	Lot 10	4	6S	96W
N. Parachute MF10D-21 C28 696	05-045-14549-0000	Grand Valley # 31290	FEE	Lot 3	28	6S	96W
N. Parachute MF10D E09 696	05-045-14995-0000	Grand Valley # 31290	FEE	SWNW	9	6S	96W
N. Parachute MF11A-16 H17 696	05-045-18702-0000	Grand Valley # 31290	FEE	Lot 7	17	6S	96W
N. Parachute MF11A-3 O04 696	05-045-18820-0000	Grand Valley # 31290	FEE	Lot 9	4	6S	96W
N. Parachute MF11A-4 N04 696	05-045-17860-0000	Grand Valley # 31290	FEE	Lot 10	4	6S	96W
N. Parachute MF11B-3 O04 696	05-045-18793-0000	Grand Valley # 31290	FEE	Lot 9	4	6S	96W
N. Parachute MF11D-3 O04 696	05-045-18804-0000	Grand Valley # 31290	FEE	Lot 9	4	6S	96W
N. Parachute MF11D N04 696	05-045-12324-0000	Grand Valley # 31290	FEE	Lot 10	4	6S	96W
N. Parachute MF11E-3 O04 696	05-045-18801-0000	Grand Valley # 31290	FEE	Lot 9	4	6S	96W
N. Parachute MF11G-3 O04 696	05-045-18805-0000	Grand Valley # 31290	FEE	Lot 9	4	6S	96W
N. Parachute MF12B-16 H17 696	05-045-18701-0000	Grand Valley # 31290	FEE	Lot 7	17	6S	96W
N. Parachute MF12B-3 O04 696	05-045-18789-0000	Grand Valley # 31290	FEE	Lot 9	4	6S	96W
N. Parachute MF12D N04 696	05-045-12319-0001	Grand Valley # 31290	FEE	Lot 10	4	6S	96W
N. Parachute MF13C-31 C04 696	05-045-15777-0000	Grand Valley # 31290	FEE	Lot 1	04	6S	96W
N. Parachute MF13D-31 C04 696	05-045-15767-0000	Grand Valley # 31290	FEE	Lot 1	04	6S	96W
N. Parachute MF13D C04 696	05-045-11836-0000	Grand Valley # 31290	FEE	Lot 1	4	6S	96W
N. Parachute MF14A-3 O04 696	05-045-18800-0000	Grand Valley # 31290	FEE	Lot 9	4	6S	96W
N. Parachute MF14C-3 O04 696	05-045-18794-0000	Grand Valley # 31290	FEE	Lot 9	4	6S	96W
N. Parachute MF14D-3 O04 696	05-045-18814-0000	Grand Valley # 31290	FEE	Lot 9	4	6S	96W
N. Parachute MF14E-3 O04 696	05-045-18813-0000	Grand Valley # 31290	FEE	Lot 9	4	6S	96W

SOURCES FOR PRODUCED WATER

As of December 20, 2011

The following wells are sources of produced water:

NON-UNIT Wells:

Well Name and Number	Well API Number	Field	Mineral Owner - Lease #	Qtr-Qtr / Lot	Sec	Twp	Rng
N. Parachute MF15A-21 C28 696	05-045-14553-0000	Grand Valley # 31290	FEE	Lot 3	28	6S	96W
N. Parachute MF15A-4 O04 696	05-045-18799-0000	Grand Valley # 31290	FEE	Lot 9	4	6S	96W
N. Parachute MF15A E09 696	05-045-14991-0000	Grand Valley # 31290	FEE	SWNW	9	6S	96W
N. Parachute MF15B-21 C28 696	05-045-14554-0000	Grand Valley # 31290	FEE	Lot 3	28	6S	96W
N. Parachute MF15B-4 N04 696	05-045-18279-0000	Grand Valley # 31290	FEE	Lot 10	4	6S	96W
N. Parachute MF15C-21 C28 696	05-045-15108-0000	Grand Valley # 31290	FEE	Lot 3	28	6S	96W
N. Parachute MF15C N04 696	05-045-12316-0000	Grand Valley # 31290	FEE	Lot 10	4	6S	96W
N. Parachute MF15D-4 O04 696	05-045-18790-0000	Grand Valley # 31290	FEE	Lot 9	4	6S	96W
N. Parachute MF16A-4 O04 696	05-045-18810-0000	Grand Valley # 31290	FEE	Lot 9	4	6S	96W
N. Parachute MF16A N04 696	05-045-12320-0000	Grand Valley # 31290	FEE	Lot 10	4	6S	96W
N. Parachute MF16C-21 C28 696	05-045-15109-0000	Grand Valley # 31290	FEE	Lot 3	28	5S	95W
N. Parachute MF16C-4 O04 696	05-045-18811-0000	Grand Valley # 31290	FEE	Lot 9	4	6S	96W
N. Parachute MF16C N04 696	05-045-12322-0000	Grand Valley # 31290	FEE	Lot 10	4	6S	96W
N. Parachute MF17A N04 696	05-045-12323-0000	Grand Valley # 31290	FEE	Lot 10	4	6S	96W
N. Parachute MF17C N04 696	05-045-12315-0000	Grand Valley # 31290	FEE	Lot 10	4	6S	96W
N. Parachute MF18A-4 N04 696	05-045-17862-0000	Grand Valley # 31290	FEE	Lot 10	4	6S	96W
N. Parachute MF18A N04 696	05-045-12314-0000	Grand Valley # 31290	FEE	Lot 10	4	6S	96W
N. Parachute MF18B-4 O04 696	05-045-18791-0000	Grand Valley # 31290	FEE	Lot 9	4	6S	96W
N. Parachute MF18C-4 N04 696	NOT YET ASSIGNED	Grand Valley # 31290	FEE	Lot 10	4	6S	96W
N. Parachute MF18C N04 696	05-045-12317-0100	Grand Valley # 31290	FEE	Lot 10	4	6S	96W
N. Parachute MF19A-3 O04 696	05-045-18812-0000	Grand Valley # 31290	FEE	Lot 9	4	6S	96W
N. Parachute MF19C-3 O04 696	05-045-18816-0000	Grand Valley # 31290	FEE	Lot 9	4	6S	96W
N. Parachute MF19D-3 O04 696	05-045-18818-0000	Grand Valley # 31290	FEE	Lot 9	4	6S	96W
N. Parachute MF19E-3 O04 696	05-045-18817-0000	Grand Valley # 31290	FEE	Lot 9	4	6S	96W

SOURCES FOR PRODUCED WATER

As of December 20, 2011

The following wells are sources of produced water:

NON-UNIT Wells:

Well Name and Number	Well API Number	Field	Mineral Owner - Lease #	Qtr-Qtr / Lot	Sec	Twp	Rng
N. Parachute MF20A D09A 696	05-045-13793-0000	Grand Valley # 31290	FEE	Lot 4	9	6S	96W
N. Parachute MF20C D09A 696	05-045-12209-0000	Grand Valley # 31290	FEE	Lot 4	9	6S	96W
N. Parachute MF20F-3 O04 696	05-045-18792-0000	Grand Valley # 31290	FEE	Lot 9	4	6S	96W
N. Parachute WF01A-26 B26 596	05-045-12366-0000	Grand Valley # 31290	FEE	NWNE	26	5S	96W
N. Parachute WF01A K25 596	05-045-14436-0000	Grand Valley # 31290	FEE	Lot 6	25	5S	96W
N. Parachute WF01B-36 A36A 596	05-045-12677-0000	Grand Valley # 31290	FED -COC 44963	NENE	36	5S	96W
N. Parachute WF01B D23 596	05-045-11564-0000	Grand Valley # 31290	FEE	NWNW	23	5S	96W
N. Parachute WF01B D23A 596	05-045-11389-0000	Grand Valley # 31290	FEE	NWNW	23	5S	96W
N. Parachute WF01B K25 596	05-045-12327-0000	Grand Valley # 31290	FEE	Lot 6	25	5S	96W
N. Parachute WF01C K25 596	05-045-12331-0000	Grand Valley # 31290	FEE	Lot 6	25	5S	96W
N. Parachute WF01D-35 K26 596	05-045-14684-0000	Grand Valley # 31290	FEE	NESW	26	5S	96W
N. Parachute WF01D-36 A36A 596	05-045-12682-0000	Grand Valley # 31290	FED -COC 44963	NENE	36	5S	96W
N. Parachute WF01D D23 596	05-045-11566-0000	Grand Valley # 31290	FEE	NWNW	23	5S	96W
N. Parachute WF01D I25 596	05-045-10764-0000	Grand Valley # 31290	FEE	Lot 4	25	5S	96W
N. Parachute WF02A-35 K26 596	05-045-14688-0000	Grand Valley # 31290	FEE	NESW	26	5S	96W
N. Parachute WF02A-36 A36 596	05-045-15634-0000	Grand Valley # 31290	FEE	NENE	36	5S	96W
N. Parachute WF02B-26 B26 596	05-045-12367-0000	Grand Valley # 31290	FED -COC 44963	NWNE	26	5S	96W
N. Parachute WF02B A15 596	05-045-10778-0000	Grand Valley # 31290	FEE	NENE	15	5S	96W
N. Parachute WF02B A36 596	05-045-11995-0000	Grand Valley # 31290	FEE	NENE	36	5S	96W
N. Parachute WF02B D23 596	05-045-11563-0000	Grand Valley # 31290	FEE	NWNW	23	5S	96W
N. Parachute WF02B D23A 596	05-045-11390-0000	Grand Valley # 31290	FEE	NWNW	23	5S	96W
N. Parachute WF02C-35 K26 596	05-045-14686-0000	Grand Valley # 31290	FEE	NESW	26	5S	96W
N. Parachute WF02C-36 A36 596	05-045-15635-0000	Grand Valley # 31290	FEE	NENE	36	5S	96W
N. Parachute WF02D-26 B26 596	05-045-12365-0000	Grand Valley # 31290	FEE	NWNE	26	5S	96W

SOURCES FOR PRODUCED WATER

As of December 20, 2011

The following wells are sources of produced water:

NON-UNIT Wells:

Well Name and Number	Well API Number	Field	Mineral Owner - Lease #	Qtr-Qtr / Lot	Sec	Twp	Rng
N. Parachute WF02D A15 596	05-045-10780-0000	Grand Valley # 31290	FEE	NENE	15	5S	96W
N. Parachute WF02D D23 596	05-045-11559-0000	Grand Valley # 31290	FEE	NWNW	23	5S	96W
N. Parachute WF02D-DX A36 596	05-045-13804-0000	Grand Valley # 31290	FEE	NENE	36	5S	96W
N. Parachute WF02D I25 596	05-045-10767-0000	Grand Valley # 31290	FEE	Lot 4	25	5S	96W
N. Parachute WF02D K23 596	05-045-10749-0000	Grand Valley # 31290	FEE	NESW	23	5S	96W
N. Parachute WF02D K25A 596	05-045-12071-0000	Grand Valley # 31290	FEE	NESW	25	5S	96W
N. Parachute WF03A-14 H15 596	05-045-21069-0000	Grand Valley # 31290	FEE	SENE	15	5S	96W
N. Parachute WF03A-25 H26 596	05-045-19031-0000	Grand Valley # 31290	FEE	SENE	26	5S	96W
N. Parachute WF03A-27 K22 596	05-045-18890-0000	Grand Valley # 31290	FEE	NESW	22	5S	96W
N. Parachute WF03A K25 596	05-045-12332-0000	Grand Valley # 31290	FEE	Lot 6	25	5S	96W
N. Parachute WF03B-14 H15 596	05-045-21087-0000	Grand Valley # 31290	FEE	SENE	15	5S	96W
N. Parachute WF03B-27 K22 596	05-045-18914-0000	Grand Valley # 31290	FEE	NESW	22	5S	96W
N. Parachute WF03B-35 H26 596	05-045-19042-0000	Grand Valley # 31290	FEE	SENE	26	5S	96W
N. Parachute WF03B D23A 596	05-045-11391-0000	Grand Valley # 31290	FEE	NWNW	23	5S	96W
N. Parachute WF03B J25A 596	05-045-12100-0000	Grand Valley # 31290	FEE	Lot 5	25	5S	96W
N. Parachute WF03B K25A 596	05-045-12073-0000	Grand Valley # 31290	FEE	NESW	25	5S	96W
N. Parachute WF03B N23 596	05-045-11048-0000	Grand Valley # 31290	FEE	SESW	23	5S	96W
N. Parachute WF03B O10A 596	05-045-12354-0000	Grand Valley # 31290	FEE	SWSE	10	5S	96W
N. Parachute WF03C-14 H15 596	05-045-21089-0000	Grand Valley # 31290	FEE	SENE	15	5S	96W
N. Parachute WF03C-27 K22 596	05-045-18860-0000	Grand Valley # 31290	FEE	NESW	22	5S	96W
N. Parachute WF03C-36 A36 596	05-045-15633-0000	Grand Valley # 31290	FEE	NENE	36	5S	96W
N. Parachute WF03D-14 H15 596	05-045-21081-0000	Grand Valley # 31290	FEE	SENE	15	5S	96W
N. Parachute WF03D-27 K22 596	05-045-18859-0000	Grand Valley # 31290	FEE	NESW	22	5S	96W
N. Parachute WF03D A15 596	05-045-10606-0000	Grand Valley # 31290	FEE	NENE	15	5S	96W

SOURCES FOR PRODUCED WATER

As of December 20, 2011

The following wells are sources of produced water:

NON-UNIT Wells:

Well Name and Number	Well API Number	Field	Mineral Owner - Lease #	Qtr-Qtr / Lot	Sec	Twp	Rng
N. Parachute WF03D A36 596	05-045-11997-0000	Grand Valley # 31290	FEE	NENE	36	5S	96W
N. Parachute WF03D B04 596	05-045-13463-0000	Grand Valley # 31290	FEE	Lot 2	4	5S	96W
N. Parachute WF03D D23 596	05-045-11565-0000	Grand Valley # 31290	FEE	NWNW	23	5S	96W
N. Parachute WF03D K23 596	05-045-10751-0000	Grand Valley # 31290	FEE	NESW	23	5S	96W
N. Parachute WF03D K25A 596	05-045-12076-0000	Grand Valley # 31290	FEE	NESW	25	5S	96W
N. Parachute WF03D N23 596	05-045-10887-0000	Grand Valley # 31290	FEE	SESW	23	5S	96W
N. Parachute WF03E-14 H15 596	05-045-21070-0000	Grand Valley # 31290	FEE	SENE	15	5S	96W
N. Parachute WF03E-15 H15 596	05-045-21074-0000	Grand Valley # 31290	FEE	SENE	15	5S	96W
N. Parachute WF03F-14 H15 596	05-045-21088-0000	Grand Valley # 31290	FEE	SENE	15	5S	96W
N. Parachute WF04A-27 K22 596	05-045-18858-0000	Grand Valley # 31290	FEE	NESW	22	5S	96W
N. Parachute WF04A-31 A36A 596	05-045-12678-0000	Grand Valley # 31290	FED -COC 60234	NENE	36	5S	96W
N. Parachute WF04A-35 H26 596	05-045-19028-0000	Grand Valley # 31290	FEE	SENE	26	5S	96W
N. Parachute WF04A K25 596	05-045-12330-0000	Grand Valley # 31290	FEE	Lot 6	25	5S	96W
N. Parachute WF04B-22 K22 596	05-045-18861-0000	Grand Valley # 31290	FEE	NESW	22	5S	96W
N. Parachute WF04B-25 H26 596	05-045-19040-0000	Grand Valley # 31290	FEE	SENE	26	5S	96W
N. Parachute WF04B-27 K22 596	05-045-18877-0000	Grand Valley # 31290	FEE	NESW	22	5S	96W
N. Parachute WF04B-31 A36A 596	05-045-12684-0000	Grand Valley # 31290	FED -COC 60234	NENE	36	5S	96W
N. Parachute WF04B K25 596	05-045-14438-0000	Grand Valley # 31290	FEE	Lot 6	25	5S	96W
N. Parachute WF04B N23 596	05-045-11050-0000	Grand Valley # 31290	FEE	SESW	23	5S	96W
N. Parachute WF04B O10A 596	05-045-12353-0000	Grand Valley # 31290	FEE	SWSE	10	5S	96W
N. Parachute WF04B O23 596	05-045-10888-0000	Grand Valley # 31290	FEE	SWSE	23	5S	96W
N. Parachute WF04C-22 K22 596	05-045-18901-0000	Grand Valley # 31290	FEE	NESW	22	5S	96W
N. Parachute WF04C-25 H26 596	05-045-19047-0000	Grand Valley # 31290	FEE	SENE	26	5S	96W
N. Parachute WF04C-27 K22 596	05-045-18899-0000	Grand Valley # 31290	FEE	NESW	22	5S	96W

SOURCES FOR PRODUCED WATER

As of December 20, 2011

The following wells are sources of produced water:

NON-UNIT Wells:

Well Name and Number	Well API Number	Field	Mineral Owner - Lease #	Qtr-Qtr / Lot	Sec	Twp	Rng
N. Parachute WF04C-31 A36A 596	05-045-13879-0000	Grand Valley # 31290	FED -COC 60234	NENE	36	5S	96W
N. Parachute WF04C K25 596	05-045-14429-0000	Grand Valley # 31290	FEE	Lot 6	25	5S	96W
N. Parachute WF04D-22 K22 596	05-045-18895-0000	Grand Valley # 31290	FEE	NESW	22	5S	96W
N. Parachute WF04D-31 A36A 596	05-045-12683-0000	Grand Valley # 31290	FED -COC 60234	NENE	36	5S	96W
N. Parachute WF04D A36 596	05-045-11996-0000	Grand Valley # 31290	FEE	NENE	36	5S	96W
N. Parachute WF04D B04 596	05-045-13458-0000	Grand Valley # 31290	FEE	Lot 2	4	5S	96W
N. Parachute WF04D K25A 596	05-045-12069-0000	Grand Valley # 31290	FEE	NESW	25	5S	96W
N. Parachute WF04D N23 596	05-045-11049-0000	Grand Valley # 31290	FEE	SESW	23	5S	96W
N. Parachute WF04D O10A 596	05-045-12355-0000	Grand Valley # 31290	FEE	SWSE	10	5S	96W
N. Parachute WF04E-31 A36A 596	05-045-13884-0000	Grand Valley # 31290	FED -COC 60234	NENE	36	5S	96W
N. Parachute WF05A K25 596	05-045-14437-0000	Grand Valley # 31290	FEE	Lot 6	25	5S	96W
N. Parachute WF05B-26 H26 596	05-045-19039-0000	Grand Valley # 31290	FEE	SENE	26	5S	96W
N. Parachute WF05B K22 596	05-045-12037-0000	Grand Valley # 31290	FEE	NESW	22	5S	96W
N. Parachute WF05B K25 596	05-045-12328-0000	Grand Valley # 31290	FEE	Lot 6	25	5S	96W
N. Parachute WF05C-22 K22 596	05-045-18911-0000	Grand Valley # 31290	FEE	NESW	22	5S	96W
N. Parachute WF05C-23 F23 596	05-045-14425-0000	Grand Valley # 31290	FED -COC 44963	SENW	23	5S	96W
N. Parachute WF05C-26 H26 596	05-045-19036-0000	Grand Valley # 31290	FEE	SENE	26	5S	96W
N. Parachute WF05D-22 K22 596	05-045-18871-0000	Grand Valley # 31290	FEE	NESW	22	5S	96W
N. Parachute WF05D-23 F23 596	05-045-14417-0000	Grand Valley # 31290	FED -COC 44963	SENW	23	5S	96W
N. Parachute WF05D K10 596	05-045-11347-0000	Grand Valley # 31290	FEE	NESW	10	5S	96W
N. Parachute WF05D K22 596	05-045-12039-0000	Grand Valley # 31290	FEE	NESW	22	5S	96W
N. Parachute WF05D K26 596	05-045-11861-0000	Grand Valley # 31290	FEE	NESW	26	5S	96W
N. Parachute WF05D M14 590	05-045-13405-0000	Grand Valley # 31290	FEE	SWSW	14	5S	96W
N. Parachute WF06A-14 H15 596	05-045-21073-0000	Grand Valley # 31290	FEE	SENE	15	5S	96W

SOURCES FOR PRODUCED WATER

As of December 20, 2011

The following wells are sources of produced water:

NON-UNIT Wells:

Well Name and Number	Well API Number	Field	Mineral Owner - Lease #	Qtr-Qtr / Lot	Sec	Twp	Rng
N. Parachute WF06A-26 H26 596	05-045-19024-0000	Grand Valley # 31290	FEE	SENE	26	5S	96W
N. Parachute WF06A-36 A36 596	05-045-15632-0000	Grand Valley # 31290	FEE	NENE	36	5S	96W
N. Parachute WF06B-14 H15 596	05-045-21085-0000	Grand Valley # 31290	FEE	SENE	15	5S	96W
N. Parachute WF06B-22 K22 596	05-045-18898-0000	Grand Valley # 31290	FEE	NESW	22	5S	96W
N. Parachute WF06B A36 596	05-045-12002-0000	Grand Valley # 31290	FEE	NENE	36	5S	96W
N. Parachute WF06B K22 596	05-045-12040-0000	Grand Valley # 31290	FEE	NESW	22	5S	96W
N. Parachute WF06B K25A 596	05-045-12072-0000	Grand Valley # 31290	FEE	NESW	25	5S	96W
N. Parachute WF06B N23 596	05-045-10925-0000	Grand Valley # 31290	FEE	SESW	23	5S	96W
N. Parachute WF06B O10A 596	05-045-12356-0000	Grand Valley # 31290	FEE	SWSE	10	5S	96W
N. Parachute WF06C-14 H15 596	05-045-21083-0000	Grand Valley # 31290	FEE	SENE	15	5S	96W
N. Parachute WF06C-22 K22 596	05-045-18878-0000	Grand Valley # 31290	FEE	NESW	22	5S	96W
N. Parachute WF06C-23 F23 596	05-045-11726-0000	Grand Valley # 31290	FED -COC 44963	SENW	23	5S	96W
N. Parachute WF06C-36 A36 596	05-045-15636-0000	Grand Valley # 31290	FEE	NENE	36	5S	96W
N. Parachute WF06C K25A 596	05-045-12074-0000	Grand Valley # 31290	FEE	NESW	25	5S	96W
N. Parachute WF06D-14 H15 596	05-045-21092-0000	Grand Valley # 31290	FEE	SENE	15	5S	96W
N. Parachute WF06D-23 F23 596	05-045-14422-0000	Grand Valley # 31290	FED -COC 44963	SENW	23	5S	96W
N. Parachute WF06D-23 F23 596 ST	NOT YET ASSIGNED	Grand Valley # 31290	FED -COC44963	SENW	23	5S	96W
N. Parachute WF06D-26 H26 596	05-045-19043-0000	Grand Valley # 31290	FEE	Lot	26	5S	96W
N. Parachute WF06D A15 596	05-045-10605-0000	Grand Valley # 31290	FEE	NENE	15	5S	96W
N. Parachute WF06D A36 596	05-045-12005-0000	Grand Valley # 31290	FEE	NENE	36	5S	96W
N. Parachute WF06D J22 596	05-045-10553-0000	Grand Valley # 31290	FEE	NWSE	22	5S	96W
N. Parachute WF06D K26 596	05-045-11862-0000	Grand Valley # 31290	FEE	NESW	26	5S	96W
N. Parachute WF07A-35 K26 596	05-045-14681-0000	Grand Valley # 31290	FEE	NESW	26	5S	96W
N. Parachute WF07A-36 A36 596	05-045-15631-0000	Grand Valley # 31290	FEE	NENE	36	5S	96W

SOURCES FOR PRODUCED WATER

As of December 20, 2011

The following wells are sources of produced water:

NON-UNIT Wells:

Well Name and Number	Well API Number	Field	Mineral Owner - Lease #	Qtr-Qtr / Lot	Sec	Twp	Rng
N. Parachute WF07A H22 596	05-045-13358-0000	Grand Valley # 31290	FEE	SENE	22	5S	96W
N. Parachute WF07B A15 596	05-045-10781-0000	Grand Valley # 31290	FEE	NENE	15	5S	96W
N. Parachute WF07B A36 596	05-045-12004-0000	Grand Valley # 31290	FEE	NENE	36	5S	96W
N. Parachute WF07B D23A 596	05-045-11384-0000	Grand Valley # 31290	FEE	NWNW	23	5S	96W
N. Parachute WF07B H22 596	05-045-13378-0000	Grand Valley # 31290	FEE	SENE	22	5S	96W
N. Parachute WF07B I25 596	05-045-10768-0000	Grand Valley # 31290	FEE	Lot 4	25	5S	96W
N. Parachute WF07C-36 A36 596	05-045-15630-0000	Grand Valley # 31290	FEE	NENE	36	5S	96W
N. Parachute WF07C H22 596	05-045-13379-0000	Grand Valley # 31290	FEE	SENE	22	5S	96W
N. Parachute WF07D A15 596	05-045-10858-0000	Grand Valley # 31290	FEE	NENE	15	5S	96W
N. Parachute WF07D A36 596	05-045-12006-0000	Grand Valley # 31290	FEE	NENE	36	5S	96W
N. Parachute WF07D H22 596	05-045-13376-0000	Grand Valley # 31290	FEE	SENE	22	5S	96W
N. Parachute WF07D I25 596	05-045-10769-0000	Grand Valley # 31290	FEE	Lot 4	25	5S	96W
N. Parachute WF07D K23 596	05-045-10747-0000	Grand Valley # 31290	FEE	NESW	23	5S	96W
N. Parachute WF08A-15 H15 596	05-045-21068-0000	Grand Valley # 31290	FED -COC 70018	SENE	15	5S	96W
N. Parachute WF08A-35 K26 596	05-045-14682-0000	Grand Valley # 31290	FEE	NESW	26	5S	96W
N. Parachute WF08A H22 596	05-045-13360-0000	Grand Valley # 31290	FEE	SENE	22	5S	96W
N. Parachute WF08B H22 596	05-045-13375-0000	Grand Valley # 31290	FEE	SENE	22	5S	96W
N. Parachute WF08B I25 596	05-045-10766-0000	Grand Valley # 31290	FEE	Lot 4	25	5S	96W
N. Parachute WF08B K23 596	05-045-10746-0000	Grand Valley # 31290	FEE	NESW	23	5S	96W
N. Parachute WF08C H22 596	05-045-13408-0000	Grand Valley # 31290	FEE	SENE	22	5S	96W
N. Parachute WF08D-21 K22 596	05-045-18897-0000	Grand Valley # 31290	FEE	NESW	22	5S	96W
N. Parachute WF08D-26 H26A 596	05-045-11261-0000	Grand Valley # 31290	FED -COC 44963	SENE	26	5S	96W
N. Parachute WF08D H22 596	05-045-13359-0000	Grand Valley # 31290	FEE	SENE	22	5S	96W
N. Parachute WF08D I25 596	05-045-10765-0000	Grand Valley # 31290	FEE	Lot 4	25	5S	96W

SOURCES FOR PRODUCED WATER

As of December 20, 2011

The following wells are sources of produced water:

NON-UNIT Wells:

Well Name and Number	Well API Number	Field	Mineral Owner - Lease #	Qtr-Qtr / Lot	Sec	Twp	Rng
N. Parachute WF08D K23 596	05-045-10745-0000	Grand Valley # 31290	FEE	NESW	23	5S	96W
N. Parachute WF08D O10A 596	05-045-12375-0000	Grand Valley # 31290	FEE	SWSE	10	5S	96W
N. Parachute WF09A-25 I25A 596	05-045-14571-0000	Grand Valley # 31290	FED -COC 44963	NESE	25	5S	96W
N. Parachute WF09B-21 K22 596	05-045-18896-0000	Grand Valley # 31290	FEE	NESW	22	5S	96W
N. Parachute WF09B-25 I25A 596	05-045-14568-0000	Grand Valley # 31290	FED -COC 44963	NESE	25	5S	96W
N. Parachute WF09B-26 H26A 596	05-045-11214-0000	Grand Valley # 31290	FED -COC 44963	SENE	26	5S	96W
N. Parachute WF09B J22 596	05-045-10555-0000	Grand Valley # 31290	FEE	NWSE	22	5S	96W
N. Parachute WF09B K22 596	05-045-12032-0000	Grand Valley # 31290	FEE	NESW	22	5S	96W
N. Parachute WF09B K23 596	05-045-10744-0000	Grand Valley # 31290	FEE	NESW	23	5S	96W
N. Parachute WF09C-25 I25A 596	05-045-11725-0000	Grand Valley # 31290	FED -COC 44963	NESE	25	5S	96W
N. Parachute WF09C-27 K26 596	05-045-11859-0000	Grand Valley # 31290	FEE	NESW	26	5S	96W
N. Parachute WF09C J22 596	05-045-10577-0000	Grand Valley # 31290	FEE	NWSE	22	5S	96W
N. Parachute WF09D-21 K22 596	05-045-18908-0000	Grand Valley # 31290	FEE	NESW	22	5S	96W
N. Parachute WF09D-25 I25A 596	05-045-14569-0000	Grand Valley # 31290	FED -COC 44963	NESE	25	5S	96W
N. Parachute WF 09D J22 596	05-045-10367-0000	Grand Valley # 31290	FEE	NWSE	22	5S	96W
N. Parachute WF09D K22 596	05-045-12028-0000	Grand Valley # 31290	FEE	NESW	22	5S	96W
N. Parachute WF09D M14 596	05-045-13367-0000	Grand Valley # 31290	FEE	SWSW	14	5S	96W
N. Parachute WF09D O10A 596	05-045-12374-0000	Grand Valley # 31290	FEE	SWSE	10	5S	96W
N. Parachute WF09D O23 596	05-045-10889-0000	Grand Valley # 31290	FEE	SWSE	23	5S	96W
N. Parachute WF10A-21 K22 596	05-045-18872-0000	Grand Valley # 31290	FEE	NESW	22	5S	96W
N. Parachute WF10A-25 I25A 596	05-045-14567-0000	Grand Valley # 31290	FED -COC 44963	NESE	25	5S	96W
N. Parachute WF10A J22 596	05-045-10576-0000	Grand Valley # 31290	FEE	NWSE	22	5S	96W
N. Parachute WF10B-21 K22 596	05-045-18916-0000	Grand Valley # 31290	FEE	NESW	22	5S	96W
N. Parachute WF10B-25 I25A 596	05-045-14573-0000	Grand Valley # 31290	FED -COC 44963	NESE	25	5S	96W

SOURCES FOR PRODUCED WATER

As of December 20, 2011

The following wells are sources of produced water:

NON-UNIT Wells:

Well Name and Number	Well API Number	Field	Mineral Owner - Lease #	Qtr-Qtr / Lot	Sec	Twp	Rng
N. Parachute WF10B A15 596	05-045-10779-0000	Grand Valley # 31290	FEE	NENE	15	5S	96W
N. Parachute WF10B D23A 596	05-045-11388-0000	Grand Valley # 31290	FEE	NWNW	23	5S	96W
N. Parachute WF10B J22 596	05-045-10552-0000	Grand Valley # 31290	FEE	NWSE	22	5S	96W
N. Parachute WF10B K23 596	05-045-10748-0000	Grand Valley # 31290	FEE	NESW	23	5S	96W
N. Parachute WF10C-25 I25A 596	05-045-14572-0000	Grand Valley # 31290	FED -COC 44963	NESE	25	5S	96W
N. Parachute WF10C J22 596	05-045-10554-0000	Grand Valley # 31290	FEE	NWSE	22	5S	96W
N. Parachute WF10D-21 K22 596	05-045-18883-0000	Grand Valley # 31290	FEE	NESW	22	5S	96W
N. Parachute WF10D-25 I25A 596	05-045-14566-0000	Grand Valley # 31290	FED -COC 44963	NESE	25	5S	96W
N. Parachute WF10D D23A 596	05-045-11385-0000	Grand Valley # 31290	FEE	NWNW	23	5S	96W
N. Parachute WF10D J22 596	05-045-10363-0000	Grand Valley # 31290	FEE	NWSE	22	5S	96W
N. Parachute WF10D O03 596	05-045-13496-0000	Grand Valley # 31290	FEE	SWSE	3	5S	96W
N. Parachute WF10D O23 596	05-045-10890-0000	Grand Valley # 31290	FEE	SWSE	23	5S	96W
N. Parachute WF11A-22 K22 596	05-045-18880-0000	Grand Valley # 31290	FEE	NESW	22	5S	96W
N. Parachute WF11A-23 F23 596	05-045-14412-0000	Grand Valley # 31290	FED -COC 44963	SENW	23	5S	96W
N. Parachute WF11B-11 H15 596	05-045-21090-0000	Grand Valley # 31290	FEE	SENE	15	5S	96W
N. Parachute WF11B-15 H15 596	05-045-21065-0000	Grand Valley # 31290	FEE	SENE	15	5S	96W
N. Parachute WF11B-23 F23 596	05-045-14414-0000	Grand Valley # 31290	FED -COC 44963	SENW	23	5S	96W
N. Parachute WF11B K10 596	05-045-11345-0000	Grand Valley # 31290	FEE	NESW	10	5S	96W
N. Parachute WF11B K22 596	05-045-12041-0000	Grand Valley # 31290	FEE	NENW	22	5S	96W
N. Parachute WF11B K26 596	05-045-11863-0000	Grand Valley # 31290	FEE	NESW	26	5S	96W
N. Parachute WF11C-23 F23 596	05-045-14408-0000	Grand Valley # 31290	FED -COC 44963	SENW	23	5S	96W
N. Parachute WF11D-14 H15 596	05-045-21071-0000	Grand Valley # 31290	FEE	SENE	15	5S	96W
N. Parachute WF11D-22 K22 596	05-045-18881-0000	Grand Valley # 31290	FEE	NESW	22	5S	96W
N. Parachute WF11D-23 F23 596	05-045-14423-0000	Grand Valley # 31290	FED -COC 44963	SENW	23	5S	96W

SOURCES FOR PRODUCED WATER

As of December 20, 2011

The following wells are sources of produced water:

NON-UNIT Wells:

Well Name and Number	Well API Number	Field	Mineral Owner - Lease #	Qtr-Qtr / Lot	Sec	Twp	Rng
N. Parachute WF11D K22 596	05-045-12036-0100	Grand Valley # 31290	FEE	NESW	22	5S	96W
N. Parachute WF11D K26 596	05-045-11860-0000	Grand Valley # 31290	FEE	NESW	26	5S	96W
N. Parachute WF11D O03 596	05-045-10366-0000	Grand Valley # 31290	FEE	SWSE	3	5S	96W
N. Parachute WF12A-23 F23 596	05-045-14419-0000	Grand Valley # 31290	FED -COC 44963	SENW	23	5S	96W
N. Parachute WF12A-26 H26 596	05-045-19049-0000	Grand Valley # 31290	FEE	SENE	26	5S	96W
N. Parachute WF12B 010A 596	05-045-12368-0000	Grand Valley # 31290	FEE	SWSE	10	5S	96W
N. Parachute WF12B-22 K22 596	05-045-18891-0000	Grand Valley # 31290	FEE	NESW	22	5S	96W
N. Parachute WF12B-23 F23 596	05-045-14410-0000	Grand Valley # 31290	FED -COC 44963	SENW	23	5S	96W
N. Parachute WF12B-26 H26 596	05-045-19048-0000	Grand Valley # 31290	FEE	SENE	26	5S	96W
N. Parachute WF12B K22 596	05-045-12035-0000	Grand Valley # 31290	FEE	NESW	22	5S	96W
N. Parachute WF12B O23 596	05-045-10891-0000	Grand Valley # 31290	FEE	SWSE	23	5S	96W
N. Parachute WF12C-22 K22 596	05-045-18904-0000	Grand Valley # 31290	FEE	NESW	22	5S	96W
N. Parachute WF12C-26 H26 596	05-045-19050-0000	Grand Valley # 31290	FEE	SENE	26	5S	96W
N. Parachute WF12D 010A 596	05-045-12357-0000	Grand Valley # 31290	FEE	SWSE	10	5S	96W
N. Parachute WF12D-23 F23 596	05-045-14383-0000	Grand Valley # 31290	FED -COC 44963	SENW	23	5S	96W
N. Parachute WF12D K22 596	05-045-12027-0000	Grand Valley # 31290	FEE	NESW	22	5S	96W
N. Parachute WF12D K26 596	05-045-11864-0000	Grand Valley # 31290	FEE	NESW	26	5S	96W
N. Parachute WF12D M14 596	05-045-13409-0000	Grand Valley # 31290	FEE	SWSW	14	5S	96W
N. Parachute WF13A K25 596	05-045-14432-0000	Grand Valley # 31290	FEE	Lot 6	25	5S	96W
N. Parachute WF13B-22 K22 596	05-045-18903-0000	Grand Valley # 31290	FEE	NESW	22	5S	96W
N. Parachute WF13B K22 596	05-045-12029-0000	Grand Valley # 31290	FEE	NESW	22	5S	96W
N. Parachute WF13B K25 596	05-045-14399-0000	Grand Valley # 31290	FEE	Lot 6	25	5S	96W
N. Parachute WF13B K26 596	05-045-11857-0000	Grand Valley # 31290	FEE	NESW	26	5S	96W
N. Parachute WF13B N23 596	05-045-10926-0000	Grand Valley # 31290	FEE	SESW	23	5S	96W

SOURCES FOR PRODUCED WATER

As of December 20, 2011

The following wells are sources of produced water:

NON-UNIT Wells:

Well Name and Number	Well API Number	Field	Mineral Owner - Lease #	Qtr-Qtr / Lot	Sec	Twp	Rng
N. Parachute WF13B O10A 596	05-045-12373-0000	Grand Valley # 31290	FEE	SWSE	10	5S	96W
N. Parachute WF13B O23 596	05-045-10892-0000	Grand Valley # 31290	FEE	SWSE	23	5S	96W
N. Parachute WF13C-22 K22 596	05-045-18892-0000	Grand Valley # 31290	FEE	NESW	22	5S	96W
N. Parachute WF13C-24 H26 596	05-045-19035-0000	Grand Valley # 31290	FEE	SENE	26	5S	96W
N. Parachute WF13C-26 H26 596	05-045-19032-0000	Grand Valley # 31290	FEE	SENE	26	5S	96W
N. Parachute WF13C K25 596	05-045-14431-0000	Grand Valley # 31290	FEE	Lot 6	25	5S	96W
N. Parachute WF13D-22 K22 596	05-045-18888-0000	Grand Valley # 31290	FEE	NESW	22	5S	96W
N. Parachute WF13D-30 A36A 596	05-045-12679-0000	Grand Valley # 31290	FED -COC 60234	NENE	36	5S	96W
N. Parachute WF13D K25 596	05-045-12334-0000	Grand Valley # 31290	FEE	Lot 6	25	5S	96W
N. Parachute WF13D K26 596	05-045-14687-0000	Grand Valley # 31290	FEE	NESW	26	5S	96W
N. Parachute WF13D N23 596	05-045-11051-0000	Grand Valley # 31290	FEE	SESW	23	5S	96W
N. Parachute WF13D O23 596	05-045-10893-0000	Grand Valley # 31290	FEE	SWSE	23	5S	96W
N. Parachute WF14A-11 H15 596	05-045-21118-0000	Grand Valley # 31290	FEE	SENE	15	5S	96W
N. Parachute WF14A-23 F23 596	05-045-14421-0000	Grand Valley # 31290	FED -COC 44963	SENW	23	5S	96W
N. Parachute WF14A K25 596	05-045-14430-0000	Grand Valley # 31290	FEE	Lot 6	25	5S	96W
N. Parachute WF14A K26 596	05-045-14685-0000	Grand Valley # 31290	FEE	NESW	26	5S	96W
N. Parachute WF14B-22 K22 596	05-045-18917-0000	Grand Valley # 31290	FEE	NESW	22	5S	96W
N. Parachute WF14B-23 F23 596	05-045-14418-0000	Grand Valley # 31290	FED -COC 44963	SENW	23	5S	96W
N. Parachute WF14B-24 H26 596	05-045-19045-0000	Grand Valley # 31290	FEE	SENE	26	5S	96W
N. Parachute WF14B-26 H26 596	05-045-19027-0000	Grand Valley # 31290	FEE	SENE	26	5S	96W
N. Parachute WF14B D23A 596	05-045-11387-0000	Grand Valley # 31290	FEE	NWNW	23	5S	96W
N. Parachute WF14B K22 596	05-045-12031-0000	Grand Valley # 31290	FEE	NESW	22	5S	96W
N. Parachute WF14B K25 596	05-045-12329-0000	Grand Valley # 31290	FEE	Lot 6	25	5S	96W
N. Parachute WF14B K25A 596	05-045-12070-0000	Grand Valley # 31290	FEE	NESW	25	5S	96W

SOURCES FOR PRODUCED WATER

As of December 20, 2011

The following wells are sources of produced water:

NON-UNIT Wells:

Well Name and Number	Well API Number	Field	Mineral Owner - Lease #	Qtr-Qtr / Lot	Sec	Twp	Rng
N. Parachute WF14C-22 K22 596	05-045-18884-0000	Grand Valley # 31290	FEE	NESW	22	5S	96W
N. Parachute WF14C-23 F23 596	05-045-14427-0000	Grand Valley # 31290	FED -COC 44963	SENW	23	5S	96W
N. Parachute WF14C K25 596	05-045-12333-0000	Grand Valley # 31290	FEE	Lot 6	25	5S	96W
N. Parachute WF14C K26 596	05-045-14683-0000	Grand Valley # 31290	FEE	NESW	26	5S	96W
N. Parachute WF14D-22 K22 596	05-045-18879-0000	Grand Valley # 31290	FEE	NESW	22	5S	96W
N. Parachute WF14D-23 B26 596	05-045-15451-0000	Grand Valley # 31290	FEE	NWNE	26	5S	96W
N. Parachute WF14D A15 596	05-045-10604-0000	Grand Valley # 31290	FEE	NENE	15	5S	96W
N. Parachute WF14D D23 596	05-045-11562-0000	Grand Valley # 31290	FEE	NWNW	23	5S	96W
N. Parachute WF14D J25A 596	05-045-12097-0000	Grand Valley # 31290	FEE	Lot 5	25	5S	96W
N. Parachute WF14D K25A 596	05-045-12075-0000	Grand Valley # 31290	FEE	NESW	25	5S	96W
N. Parachute WF15A-21 K22 596	05-045-18887-0000	Grand Valley # 31290	FEE	NESW	22	5S	96W
N. Parachute WF15A-22 K22 596	05-045-18870-0000	Grand Valley # 31290	FEE	NESW	22	5S	96W
N. Parachute WF15A-23 F23 596	05-045-14426-0000	Grand Valley # 31290	FED -COC 44963	SENW	23	5S	96W
N. Parachute WF15A-25 A36 596	05-045-15629-0000	Grand Valley # 31290	FEE	NENE	36	5S	96W
N. Parachute WF15B-23 B26 596	05-045-15454-0000	Grand Valley # 31290	FED -COC44963	NWNE	26	5S	96W
N. Parachute WF15B D23 596	05-045-11560-0000	Grand Valley # 31290	FEE	NWNW	23	5S	96W
N. Parachute WF15B D23A 596	05-045-11386-0000	Grand Valley # 31290	FEE	NWNW	23	5S	96W
N. Parachute WF15B J25A 596	05-045-12099-0000	Grand Valley # 31290	FEE	Lot 5	25	5S	96W
N. Parachute WF15B K22 596	05-045-12034-0000	Grand Valley # 31290	FEE	NESW	22	5S	96W
N. Parachute WF15C-22 K22 596	05-045-18922-0000	Grand Valley # 31290	FEE	NESW	22	5S	96W
N. Parachute WF15C-25 A36 596	05-045-15628-0000	Grand Valley # 31290	FEE	NENE	36	5S	96W
N. Parachute WF15C-26 B26 596	05-045-15453-0000	Grand Valley # 31290	FEE	NWNE	26	5S	96W
N. Parachute WF15D-23 B26 596	05-045-15452-0000	Grand Valley # 31290	FED -COC44963	NWNE	26	5S	96W
N. Parachute WF15D D23 596	05-045-11561-0000	Grand Valley # 31290	FEE	NWNW	23	5S	96W

SOURCES FOR PRODUCED WATER

As of December 20, 2011

The following wells are sources of produced water:

NON-UNIT Wells:

Well Name and Number	Well API Number	Field	Mineral Owner - Lease #	Qtr-Qtr / Lot	Sec	Twp	Rng
N. Parachute WF15D J25A 596	05-045-12098-0000	Grand Valley # 31290	FEE	Lot 5	25	5S	96W
N. Parachute WF15D K22 596	05-045-12033-0000	Grand Valley # 31290	FEE	NESW	22	5S	96W
N. Parachute WF15D K23 596	05-045-10750-0000	Grand Valley # 31290	FEE	NESW	23	5S	96W
N. Parachute WF15D O03 596	05-045-10402-0000	Grand Valley # 31290	FEE	SWSE	3	5S	96W
N. Parachute WF16A-21 K22 596	05-045-18919-0000	Grand Valley # 31290	FEE	NESW	22	5S	96W
N. Parachute WF16A-25 I25A 596	05-045-14570-0000	Grand Valley # 31290	FED -COC 44963	NESE	25	5S	96W
N. Parachute WF16A-36 P36 596	05-045-07177-0000	Grand Valley # 31290	FED -COC 44963	SESE	36	5S	96W
N. Parachute WF16A K25 596	05-045-14435-0000	Grand Valley # 31290	FEE	Lot 6	25	5S	96W
N. Parachute WF16B-21 K22 596	05-045-12026-0000	Grand Valley # 31290	FEE	NESW	22	5S	96W
N. Parachute WF16B K22 596	05-045-12038-0000	Grand Valley # 31290	FEE	NESW	22	5S	96W
N. Parachute WF16B K25 596	05-045-14434-0000	Grand Valley # 31290	FEE	Lot 6	25	5S	96W
N. Parachute WF16B O23 596	05-045-10894-0000	Grand Valley # 31290	FEE	SWSE	23	5S	96W
N. Parachute WF16C-21 K22 596	05-045-18920-0000	Grand Valley # 31290	FEE	NESW	22	5S	96W
N. Parachute WF16C K25 596	05-045-14433-0000	Grand Valley # 31290	FEE	Lot 6	25	5S	96W
N. Parachute WF16D-21 K22 596	05-045-18921-0000	Grand Valley # 31290	FEE	NESW	22	5S	96W
N. Parachute WF16D-27 K26 596	05-045-11858-0100	Grand Valley # 31290	FEE	NESW	26	5S	96W
N. Parachute WF16D K25 596	05-045-14398-0000	Grand Valley # 31290	FEE	Lot 6	25	5S	96W
N. Parachute WF16D N23 596	05-045-11052-0000	Grand Valley # 31290	FEE	SESW	23	5S	96W
N. Parachute WF16D O10A 596	05-045-12370-0000	Grand Valley # 31290	FEE	SWSE	10	5S	96W
N. Parachute WF16D O23 596	05-045-10895-0000	Grand Valley # 31290	FEE	SWSE	23	5S	96W
UNOCAL 16-11D	05-045-10203-0000	Grand Valley # 31290	FEE	Lot 7	17	6S	96W
UNOCAL 16-12D	05-045-10202-0000	Grand Valley # 31290	FEE	Lot 7	17	6S	96W
UNOCAL 16-21D	05-045-10204-0000	Grand Valley # 31290	FEE	Lot 7	17	6S	96W
UNOCAL 16-22D	05-045-10205-0000	Grand Valley # 31290	FEE	Lot 7	17	6S	96W

SOURCES FOR PRODUCED WATER

As of December 20, 2011

The following wells are sources of produced water:

NON-UNIT Wells:

Well Name and Number	Well API Number	Field	Mineral Owner - Lease #	Qtr-Qtr / Lot	Sec	Twp	Rng
UNOCAL 22-4	05-045-10082-0000	Grand Valley # 31290	FEE	SENW	4	6S	96W
UNOCAL 23-4D	05-045-10083-0000	Grand Valley # 31290	FEE	SENW	4	6S	96W
UNOCAL 33-4D	05-045-10084-0000	Grand Valley # 31290	FEE	SENW	4	6S	96W
UNOCAL 4-13DX	05-045-10077-0000	Grand Valley # 31290	FEE	SENW	4	6S	96W
UNOCAL 9-11D	05-045-10033-0000	Grand Valley # 31290	FEE	Lot 4	9	6S	96W
UNOCAL 9-12D	05-045-10037-0000	Grand Valley # 31290	FEE	Lot 4	9	6S	96W
UNOCAL 9-21D	05-045-10035-0000	Grand Valley # 31290	FEE	Lot 4	9	6S	96W
UNOCAL 9-22D	05-045-10038-0000	Grand Valley # 31290	FEE	Lot 4	9	6S	96W

SOURCES FOR PRODUCED
As of December 20, 2011

The following wells are sources of produced water:

BIG JIMMY UNIT # COC74105X

Well Name and Number	Well API Number	Field	Mineral Owner - Lease #	Qtr-Qtr / Lot	Sec	Twp	Rng
BULL FORK UNIT 3	05-045-06939-0000	Willow Creek # 93100	FED -COC50268	NENE	19	4S	97W
DOUBLE WILLOW 8601D A19 497	05-045-07218-0000	Willow Creek # 93100	FED -COC50268	NENE	19	4S	97W
DOUBLE WILLOW 8602D B17 497	05-103-09849-0000	Willow Creek # 93100	FED -COC50267	NWNE	17	4S	97W
DOUBLE WILLOW 8609C I20 497	05-045-06977-0000	Bull Fork # 7810	FED -COC50268	NESE	20	4S	97W
DOUBLE WILLOW 8610A J19 497	05-045-05130-0000	Williams Fork # 93050	FED -COC50268	NWSE	19	4S	97W
DOUBLE WILLOW 8611C K17 497	05-103-05009-0000	Willow Creek # 93100	FED -COC50267	NESW	17	4S	97W
DOUBLE WILLOW 8613A M04 497	05-103-09853-0000	Bull Fork # 7810	FED -COC57687	SWSW	4	4S	97W
DOUBLE WILLOW 8616C P20 497	05-045-07208-0000	Bull Fork # 7810	FED -COC50268	SESE	20	4S	97W
DOUBLE WILLOW UNIT 8601C A07 497	05-103-10498-0000	Wildcat # 99999	FED -COC65561	NENE	7	4S	97W
DOUBLE WILLOW UNIT 8603C C06 497	05-103-10494-0000	Wildcat # 99999	FED -COC65565	NENW	6	4S	97W
DOUBLE WILLOW UNIT 8607A G02 497	05-103-10473-0000	Wildcat # 99999	FED -COC65564	SWNE	2	4S	97W
DOUBLE WILLOW UNIT 8608B H08 497	05-103-10346-0000	Wildcat # 99999	FED -COC65561	SENE	8	4S	97W
DOUBLE WILLOW UNIT 8613B M29 496	05-045-09925-0000	Wildcat # 99999	FED -COC65555	SWSW	29	4S	96W
DW 8608D-28 P28 496	05-045-20799-0000	Wildcat # 99999	FED -COC65555	SESE	28	4S	96W
DW 8608E-28 P28 496	05-045-20803-0000	Wildcat # 99999	FED -COC65555	SESE	28	4S	96W
DW 8608F-28 P28 496	05045208040000	Wildcat # 99999	FED -COC65555	SESE	28	4S	96W
DW 8609A-28 P28 496	05-045-20798-0000	Wildcat # 99999	FED -COC65555	SESE	28	4S	96W
DW CP01B-33 E34 496	05-045-15094-0000	#	FEE	SWNW	23	4S	96W
DWU CP08B-33 E34 496	05-045-15092-0000	#	FEE	SWNW	23	4S	96W
DWU CP08D-32 M33 496	05-045-14700-0000	Wildcat # 99999	FEE	SWSW	33	4S	96W
DWU CP13B-33 M33 496	05-045-14701-0000	Wildcat # 99999	FEE	SWSW	33	4S	96W
DWU CP14D-33 M33 496	05-045-14698-0000	Wildcat # 99999	FEE	SWSW	33	4S	96W
EUREKA UNIT 8803B F19 397	05-103-10472-0000	Wildcat # 99999	FED -COC65559	SENW	19	3S	97W

SOURCES FOR PRODUCED
As of December 20, 2011

The following wells are sources of produced water:

BIG JIMMY UNIT # COC74105X

Well Name and Number	Well API Number	Field	Mineral Owner - Lease #	Qtr-Qtr / Lot	Sec	Twp	Rng
EUREKA UNIT 8803D-30 D30 397	05-103-11763-0000	Wildcat # 99999	FED -COC65559	Lot 4	19	3S	97W
EUREKA UNIT 8806C F19 397	05-103-10471-0000	Wildcat # 99999	FED -COC65559	SENW	19	3S	97W
EUREKA UNIT 8806D-30 D30 397	05-103-11766-0000	Wildcat # 99999	FED -COC65559	Lot 4	19	3S	97W
EUREKA UNIT 8807A G27 397	05-103-10780-0100	Wildcat # 99999	FED -FEE	SWNE	27	3S	97W
EUREKA UNIT 8807B-24 D30 397	05-103-11767-0000	Wildcat # 99999	FED -COC60749	Lot 4	19	3S	97W
EUREKA UNIT 8807B-25 D30 397	05-103-11764-0000	Wildcat # 99999	FED -COC65568	Lot 4	19	3S	97W
EUREKA UNIT 8809D-25 D30 397	05-103-11761-0000	Wildcat # 99999	FED -COC60749	Lot 4	19	3S	97W
EUREKA UNIT 8810B-24 D30 397	05-103-11762-0000	Wildcat # 99999	FED -COC65568	Lot 4	19	3S	97W
EUREKA UNIT 8814A N11 397	05-103-10424-0000	Wildcat # 99999	FED -FEE	SESW	11	3S	97W
EUREKA UNIT 8814B-19 D30 397	05-103-11768-0000	Wildcat # 99999	FED -COC65559	Lot 4	19	3S	97W
EUREKA UNIT 8815D-24 D30 397	05-103-11765-0000	Wildcat # 99999	FED -COC65568	Lot 4	19	3S	97W
Figure Four Unit 8011D K18 498	05-103-10152-0000	Wildcat # 99999	FED -FEE	NESW	18	4S	98W
Figure Four Unit DH04A-17 L16 498	05-103-11514-0000	Wildcat # 99999	FED -COC56835	NESW	16	4S	98W
Figure Four Unit DH07A-09 L16 498	05-103-11511-0000	Wildcat # 99999	FED -COC56835	NESW	16	4S	98W
SG 8516B-26 D36 496	NOT YET ASSIGNED	Wildcat # 99999	FEE	Lot 4	36	4S	96W
SG 8516C-26 D36 496	NOT YET ASSIGNED	Wildcat # 99999	FEE	Lot 4	36	4S	96W
SGU 8502A-36 B36 496	05-045-19826-0000	Wildcat # 99999	FED -COC65557	Lot 2	36	4S	96W
SGU 8502C-25 F25 496	05-045-19777-0000	Wildcat # 99999	FED -COC61136	SENW	25	4S	96W
SGU 8502C-36 B36 496	05-045-19825-0000	Wildcat # 99999	FED -COC65557	Lot 2	36	4S	96W
SGU 8502D-25 F25 496	05-045-19760-0000	Wildcat # 99999	FED -COC61136	SENW	25	4S	96W
SGU 8502E-25 F25 496	05-045-19814-0000	Wildcat # 99999	FED -COC61136	SENW	25	4S	96W
SGU 8502F-25 F25 496	05-045-19775-0000	Wildcat # 99999	FED -COC61136	SENW	25	4S	96W
SGU 8503D-36 B36 496	05-045-19822-0000	Wildcat # 99999	FED -COC65557	Lot 2	36	4S	96W
SGU 8504B-25 F25 496	05-045-19756-0000	Wildcat # 99999	FED -COC61136	SENW	25	4S	96W

SOURCES FOR PRODUCED
As of December 20, 2011

The following wells are sources of produced water:

BIG JIMMY UNIT # COC74105X

Well Name and Number	Well API Number	Field	Mineral Owner - Lease #	Qtr-Qtr / Lot	Sec	Twp	Rng
SGU 8504D-25 F25 496	05-045-19762-0000	Wildcat # 99999	FED -COC61136	SENW	25	4S	96W
SGU 8506B-36 B36 496	05-045-19820-0000	Wildcat # 99999	FED -COC65557	Lot 2	36	4S	96W
SGU 8507A-36 B36 496	05-045-19819-0000	Wildcat # 99999	FED -COC65557	Lot 2	36	4S	96W
SGU 8507B-25 F25 496	05-045-19766-0000	Wildcat # 99999	FED -COC61136	SENW	25	4S	96W
SGU 8507B-36 B36 496	05-045-19824-0000	Wildcat # 99999	FED -COC65557	Lot 2	36	4S	96W
SGU 8507C-36 B36 496	05-045-19821-0000	Wildcat # 99999	FED -COC65557	Lot 2	36	4S	96W
SGU 8508A-36 B36 496	05-045-19837-0000	Wildcat # 99999	FED -COC65557	Lot 2	36	4S	96W
SGU 8508C-36 B36 496	05-045-19839-0000	Wildcat # 99999	FED -COC65557	Lot 2	36	4S	96W
SGU 8509A-36 B36 496	05-045-19840-0000	Wildcat # 99999	FED -COC61138	Lot 2	36	4S	96W
SGU 8511A-36 B36 496	05-045-19852-0000	Wildcat # 99999	FED -COC65557	Lot 2	36	4S	96W
SGU 8513B-24 F25 496	05-045-19771-0000	Wildcat # 99999	FED -COC64814	SENW	25	4S	96W
SGU 8513D-24 F25 496	05-045-19761-0000	Wildcat # 99999	FED -COC64814	SENW	25	4S	96W
SGU 8513E-24 F25 496	05-045-19773-0000	Wildcat # 99999	FED -COC64814	SENW	25	4S	96W
SGU 8513F-24 F25 496	05-045-19770-0000	Wildcat # 99999	FED -COC64814	SENW	25	4S	96W
SGU 8515B-24 F25 496	05-045-19758-0000	Wildcat # 99999	FED -COC64814	SENW	25	4S	96W
SGU 8515C-24 F25 496	05-045-19776-0000	Wildcat # 99999	FED -COC64814	SENW	25	4S	96W
SGU 8515D-24 F25 496	05-045-19772-0000	Wildcat # 99999	FED -COC64814	SENW	25	4S	96W
SGU 8515E-24 F25 496	05-045-19767-0000	Wildcat # 99999	FED -COC64814	SENW	25	4S	96W
SGU 8515F-24 F25 496	05-045-19755-0000	Wildcat # 99999	FED -COC64814	SENW	25	4S	96W
SGU CP01D-34 H34 496	05-045-15605-0000	#	FEE	SENE	34	4S	96W
SGU CP07C-27 L27 496	05-045-15030-0000	#	FEE	NWSW	27	4A	96W
SGU CP07C-35 G35 496	05-045-14528-0000	Wildcat # 99999	FED -COC61138	SWNE	35	4S	96W
SGU CP08A-35 G35 496	05-045-14529-0000	Wildcat # 99999	FED -COC061138	SWNE	35	4S	96W
SGU CP08D-34 H34 496	05-045-15606-0000	#	FEE	SENE	34	4S	96W

SOURCES FOR PRODUCED
As of December 20, 2011

The following wells are sources of produced water:

BIG JIMMY UNIT # COC74105X

Well Name and Number	Well API Number	Field	Mineral Owner - Lease #	Qtr-Qtr / Lot	Sec	Twp	Rng
SGU CP11D-27 L27 496	05-045-15032-0000	#	FEE	NWSW	27	4S	96W
SGU CP11D-34 M34 496	05-045-14534-0000	Wildcat # 99999	FEE	Lot 1	34	4S	96W
SGU CP12B-34 M34 496	05-045-14703-0000	Wildcat # 99999	FEE	Lot 1	34	4S	96W
SGU CP12B-35 H34 496	05-045-15608-0000	#	FEE	SENE	34	4S	96W
SGU CP12D-23 M23 495	05-045-15497-0000	#	FED -COC-64814	SWSW	23	4S	96W
SGU CP13B-34 M34 496	05-045-14704-0000	Wildcat # 99999	FED -COC69557	Lot 1	34	4S	96W
Story Gulch Unit 8501A-36 B36 496	05-045-18996-0000	Wildcat # 99999	FED -COC65557	Lot 2	36	4S	96W
Story Gulch Unit 8501B-36 B36 496	05-045-19003-0000	Wildcat # 99999	FED -COC65557	Lot 1	36	4S	96W
Story Gulch Unit 8501D-36 B36 496	05-045-18997-0000	Wildcat # 99999	FED -COC65557	Lot 2	36	4S	96W
Story Gulch Unit 8502B-25 F25 496	05-045-19156-0100	Wildcat # 99999	FED -COC61136	SENW	25	4S	96W
Story Gulch Unit 8502B-36 B36 496	05-045-19002-0000	Wildcat # 99999	FED -COC65557	Lot 2	36	4S	96W
Story Gulch Unit 8503A-36 B36 496	05-045-19000-0000	Wildcat # 99999	FED -COC65557	Lot 2	36	4S	96W
Story Gulch Unit 8505A-25 F25 496	05-045-19110-0000	Wildcat # 99999	FED -COC61136	SENW	25	4S	96W
Story Gulch Unit 8505A-36 B36 496	05-045-18998-0000	Wildcat # 99999	FED -COC65557	Lot 2	36	4S	96W
Story Gulch Unit 8505B-25 F25 496	05-045-19084-0000	Wildcat # 99999	FED -COC61136	SENW	25	4S	96W
Story Gulch Unit 8505B-36 B36 496	05-045-18999-0000	Wildcat # 99999	FED -COC-65557	Lot 2	36	4S	96W
Story Gulch Unit 8505C-25 F25 496	05-045-19087-0000	Wildcat # 99999	FED -COC61136	SENW	25	4S	96W
Story Gulch Unit 8505C-36 B36 496	05-045-19120-0000	Wildcat # 99999	FED -COC65557	Lot 2	36	4S	96W
Story Gulch Unit 8505D-25 F25 496	05-045-19107-0000	Wildcat # 99999	FED -COC61136	SENW	25	4S	96W
Story Gulch Unit 8505D-36 B36 496	05-045-19115-0000	Wildcat # 99999	FED -COC65557	Lot 2	36	4S	96W
Story Gulch Unit 8506A-36 B36 496	05-045-19119-0000	Wildcat # 99999	FED -COC65557	Lot 2	36	4S	96W
Story Gulch Unit 8506B-25 F25 496	05-045-19166-0000	Wildcat # 99999	FED -COC61136	SENW	25	4S	96W
Story Gulch Unit 8506C-25 F25 496	05-045-19157-0000	Wildcat # 99999	FED -COC61136	SENW	25	4S	96W
Story Gulch Unit 8506D-25 F25 496	05-045-19068-0000	Wildcat # 99999	FED -COC61136	SENW	25	4S	96W

SOURCES FOR PRODUCED

As of December 20, 2011

The following wells are sources of produced water:

BIG JIMMY UNIT # COC74105X

Well Name and Number	Well API Number	Field	Mineral Owner - Lease #	Qtr-Qtr / Lot	Sec	Twp	Rng
Story Gulch Unit 8506D-36 B36 496	05-045-19113-0000	Wildcat # 99999	FED -COC65557	Lot 2	36	4S	96W
Story Gulch Unit 8507A-25 F25 496	05-045-19161-0000	Wildcat # 99999	FED -COC61136	SENW	25	4S	96W
Story Gulch Unit 8507C-25 F25 496	05-045-19165-0000	Wildcat # 99999	FED -COC61136	SENW	25	4S	96W
Story Gulch Unit 8507D-36 B36 496	05-045-19118-0000	Wildcat # 99999	FED -COC65557	Lot 2	36	4S	96W
Story Gulch Unit 8508B-36 B36 496	05-045-19001-0000	Wildcat # 99999	FED -COC65557	Lot 2	36	4S	96W
Story Gulch Unit 8508D-36 B36 496	05-045-19117-0000	Wildcat # 99999	FED -COC65557	Lot 2	36	4S	96W
Story Gulch Unit 8509B-36 B36 496	05-045-19114-0000	Wildcat # 99999	FED -COC61138	Lot 2	36	4S	96W
Story Gulch Unit 8509D-36 B36 496	05-045-19116-0000	Wildcat # 99999	FED -COC61138	Lot 2	36	4S	96W
Story Gulch Unit 8513A-24 F25 496	05-045-19159-0000	Wildcat # 99999	FED -COC61136	SENW	25	4S	96W
Story Gulch Unit 8513C-24 F25 496	05-045-19162-0000	Wildcat # 99999	FED -COC61136	SENW	25	4S	96W
Story Gulch Unit 8515A-24 F25 496	05-045-19160-0000	Wildcat # 99999	FED -COC64814	SENW	25	4S	96W

STORY GULCH PA A # COC69333A

Well Name and Number	Well API Number	Field	Mineral Owner - Lease #	Qtr-Qtr / Lot	Sec	Twp	Rng
SG 8501D-21 N22 496	05-045-20650-0000	Wildcat # 99999	FED -COC64815	Lot 5	22	4S	96W
Story Gulch Unit 8506B F26 496	05-045-11293-0000	Wildcat # 99999	FED -COC64814	SENW	26	4S	96W

Mountain States ACCUTEST LABORATORIES

Sample Results

Report of Analysis

Report of Analysis

Client Sample ID:	POND-122211		
Lab Sample ID:	D30585-1	**Date Sampled:**	12/22/11
Matrix:	AQ - Water	**Date Received:**	12/23/11
Method:	SW846 8260B	**Percent Solids:**	n/a
Project:	NPR Monthly Sampling		

	File ID	DF	Analyzed	By	Prep Date	Prep Batch	Analytical Batch
Run #1 [a]	G114350.D	1	01/05/12	AMA	n/a	n/a	M:MSG4600
Run #2 [a]	G114367.D	100	01/05/12	AMA	n/a	n/a	M:MSG4600

	Purge Volume
Run #1	5.0 ml
Run #2	5.0 ml

Purgeable Aromatics

CAS No.	Compound	Result	RL	Units	Q
71-43-2	Benzene	6.66 [b]	0.050	mg/l	
108-88-3	Toluene	10.2 [b]	0.10	mg/l	
100-41-4	Ethylbenzene	0.322	0.0010	mg/l	
1330-20-7	Xylene (total)	5.23 [b]	0.10	mg/l	
141-78-6	Ethyl Acetate	ND	0.0050	mg/l	

CAS No.	Surrogate Recoveries	Run# 1	Run# 2	Limits
1868-53-7	Dibromofluoromethane	95%	94%	70-130%
2037-26-5	Toluene-D8	99%	97%	70-130%
460-00-4	4-Bromofluorobenzene	86%	94%	70-130%

(a) Analysis performed at Accutest Laboratories, Marlborough, MA.
(b) Result is from Run# 2

ND = Not detected
RL = Reporting Limit
E = Indicates value exceeds calibration range

J = Indicates an estimated value
B = Indicates analyte found in associated method blank
N = Indicates presumptive evidence of a compound

Report of Analysis

Client Sample ID:	POND-122211		
Lab Sample ID:	D30585-1	**Date Sampled:**	12/22/11
Matrix:	AQ - Water	**Date Received:**	12/23/11
Method:	SW846 8015B	**Percent Solids:**	n/a
Project:	NPR Monthly Sampling		

	File ID	DF	Analyzed	By	Prep Date	Prep Batch	Analytical Batch
Run #1	FA06967.D	1	01/05/12	TR	n/a	n/a	GFA453
Run #2							

	Initial Volume	Final Volume
Run #1	1.0 ml	10.0 ml
Run #2		

CAS No.	Compound	Result	RL	Units	Q
64-17-5	Ethanol	ND	10	mg/l	
67-56-1	Methanol	ND	10	mg/l	

CAS No.	Surrogate Recoveries	Run# 1	Run# 2	Limits
71-36-3	n-Butyl Alcohol	100%		25-169%

ND = Not detected
RL = Reporting Limit
E = Indicates value exceeds calibration range

J = Indicates an estimated value
B = Indicates analyte found in associated method blank
N = Indicates presumptive evidence of a compound

Report of Analysis

Client Sample ID:	POND-122211		
Lab Sample ID:	D30585-1	**Date Sampled:**	12/22/11
Matrix:	AQ - Water	**Date Received:**	12/23/11
Method:	SW846 8015B	**Percent Solids:**	n/a
Project:	NPR Monthly Sampling		

	File ID	DF	Analyzed	By	Prep Date	Prep Batch	Analytical Batch
Run #1	GB14441.D	5	12/28/11	SK	n/a	n/a	GGB816
Run #2							

	Purge Volume
Run #1	5.0 ml
Run #2	

CAS No.	Compound	Result	RL	Units	Q
	TPH-GRO (C6-C10)	44.1	1.0	mg/l	

CAS No.	Surrogate Recoveries	Run# 1	Run# 2	Limits
120-82-1	1,2,4-Trichlorobenzene	93%		60-140%

ND = Not detected
RL = Reporting Limit
E = Indicates value exceeds calibration range

J = Indicates an estimated value
B = Indicates analyte found in associated method blank
N = Indicates presumptive evidence of a compound

Report of Analysis

Client Sample ID:	POND-122211		
Lab Sample ID:	D30585-1	**Date Sampled:**	12/22/11
Matrix:	AQ - Water	**Date Received:**	12/23/11
Method:	RSK175 MOD	**Percent Solids:**	n/a
Project:	NPR Monthly Sampling		

	File ID	DF	Analyzed	By	Prep Date	Prep Batch	Analytical Batch
Run #1	FB05468.D	10	12/23/11	JY	n/a	n/a	GFB197
Run #2							

CAS No.	Compound	Result	RL	Units	Q
74-82-8	Methane	1.03	0.00080	mg/l	

CAS No.	Surrogate Recoveries	Run# 1	Run# 2	Limits
74-98-6	Propane	0% [a]		50-141%

(a) Outside control limits due to dilution.

ND = Not detected
RL = Reporting Limit
E = Indicates value exceeds calibration range

J = Indicates an estimated value
B = Indicates analyte found in associated method blank
N = Indicates presumptive evidence of a compound

Report of Analysis

Client Sample ID:	POND-122211		
Lab Sample ID:	D30585-1	**Date Sampled:**	12/22/11
Matrix:	AQ - Water	**Date Received:**	12/23/11
Method:	SW846-8015B SW846 3510C	**Percent Solids:**	n/a
Project:	NPR Monthly Sampling		

	File ID	DF	Analyzed	By	Prep Date	Prep Batch	Analytical Batch
Run #1	FD12535.D	1	12/23/11	TR	12/23/11	OP5069	GFD650
Run #2							

	Initial Volume	Final Volume
Run #1	1060 ml	2.0 ml
Run #2		

CAS No.	Compound	Result	RL	Units	Q
	TPH-DRO (C10-C28)	10.5	0.38	mg/l	

CAS No.	Surrogate Recoveries	Run# 1	Run# 2	Limits
84-15-1	o-Terphenyl	97%		25-146%

ND = Not detected
RL = Reporting Limit
E = Indicates value exceeds calibration range

J = Indicates an estimated value
B = Indicates analyte found in associated method blank
N = Indicates presumptive evidence of a compound

Report of Analysis

Client Sample ID:	POND-122211		
Lab Sample ID:	D30585-1	**Date Sampled:**	12/22/11
Matrix:	AQ - Water	**Date Received:**	12/23/11
		Percent Solids:	n/a
Project:	NPR Monthly Sampling		

Total Metals Analysis

Analyte	Result	RL	Units	DF	Prep	Analyzed	By	Method	Prep Method
Aluminum	0.363	0.10	mg/l	1	12/27/11	12/28/11	JB	SW846 6010B [2]	SW846 3010A [5]
Antimony	< 0.030	0.030	mg/l	1	12/27/11	12/28/11	JB	SW846 6010B [2]	SW846 3010A [5]
Arsenic	< 0.025	0.025	mg/l	1	12/27/11	12/28/11	JB	SW846 6010B [2]	SW846 3010A [5]
Barium	48.8	0.10	mg/l	10	12/27/11	12/28/11	JB	SW846 6010B [2]	SW846 3010A [5]
Beryllium	< 0.010	0.010	mg/l	1	12/27/11	12/28/11	JB	SW846 6010B [2]	SW846 3010A [5]
Boron	8.85	0.050	mg/l	1	12/27/11	12/28/11	JB	SW846 6010B [2]	SW846 3010A [5]
Cadmium	< 0.010	0.010	mg/l	1	12/27/11	12/28/11	JB	SW846 6010B [2]	SW846 3010A [5]
Calcium	276	0.40	mg/l	1	12/27/11	12/28/11	JB	SW846 6010B [2]	SW846 3010A [5]
Chromium	< 0.010	0.010	mg/l	1	12/27/11	12/28/11	JB	SW846 6010B [2]	SW846 3010A [5]
Cobalt [a]	< 0.050	0.050	mg/l	10	12/27/11	12/28/11	JB	SW846 6010B [2]	SW846 3010A [5]
Copper	< 0.010	0.010	mg/l	1	12/27/11	12/28/11	JB	SW846 6010B [2]	SW846 3010A [5]
Iron	23.7	0.070	mg/l	1	12/27/11	12/28/11	JB	SW846 6010B [2]	SW846 3010A [5]
Lead	< 0.050	0.050	mg/l	1	12/27/11	12/28/11	JB	SW846 6010B [2]	SW846 3010A [5]
Lithium	3.28	0.0020	mg/l	1	12/27/11	12/29/11	JB	SW846 6010B [3]	SW846 3010A [5]
Magnesium	16.9	0.20	mg/l	1	12/27/11	12/28/11	JB	SW846 6010B [2]	SW846 3010A [5]
Manganese	0.664	0.0050	mg/l	1	12/27/11	12/28/11	JB	SW846 6010B [2]	SW846 3010A [5]
Mercury	0.00013	0.00010	mg/l	1	12/28/11	12/28/11	JB	SW846 7470A [1]	SW846 7470A [7]
Molybdenum	< 0.010	0.010	mg/l	1	12/27/11	12/28/11	JB	SW846 6010B [2]	SW846 3010A [5]
Nickel	< 0.030	0.030	mg/l	1	12/27/11	12/28/11	JB	SW846 6010B [2]	SW846 3010A [5]
Potassium	68.8	10	mg/l	10	12/27/11	12/28/11	JB	SW846 6010B [2]	SW846 3010A [5]
Selenium	0.16	0.0020	mg/l	5	12/27/11	01/06/12	GJ	SW846 6020A [4]	SW846 3010A [6]
Silver	< 0.030	0.030	mg/l	1	12/27/11	12/28/11	JB	SW846 6010B [2]	SW846 3010A [5]
Sodium	5490	4.0	mg/l	10	12/27/11	12/28/11	JB	SW846 6010B [2]	SW846 3010A [5]
Strontium	35.8	0.050	mg/l	10	12/27/11	12/28/11	JB	SW846 6010B [2]	SW846 3010A [5]
Thallium	< 0.010	0.010	mg/l	1	12/27/11	12/29/11	JB	SW846 6010B [3]	SW846 3010A [5]
Titanium	< 0.010	0.010	mg/l	1	12/27/11	12/28/11	JB	SW846 6010B [2]	SW846 3010A [5]
Vanadium	< 0.010	0.010	mg/l	1	12/27/11	12/28/11	JB	SW846 6010B [2]	SW846 3010A [5]
Zinc	0.669	0.030	mg/l	1	12/27/11	12/28/11	JB	SW846 6010B [2]	SW846 3010A [5]

(1) Instrument QC Batch: MA2081
(2) Instrument QC Batch: MA2082
(3) Instrument QC Batch: MA2084
(4) Instrument QC Batch: MA2097
(5) Prep QC Batch: MP6548
(6) Prep QC Batch: MP6549
(7) Prep QC Batch: MP6557

(a) Elevated detection limit due to dilution required for possible matrix interference.

RL = Reporting Limit

Report of Analysis

Client Sample ID:	POND-122211		
Lab Sample ID:	D30585-1	**Date Sampled:**	12/22/11
Matrix:	AQ - Water	**Date Received:**	12/23/11
		Percent Solids:	n/a
Project:	NPR Monthly Sampling		

General Chemistry

Analyte	Result	RL	Units	DF	Analyzed	By	Method
Alkalinity, Bicarbonate as CaC	700	5.0	mg/l	1	12/30/11	JD	SM20 2320B
Alkalinity, Carbonate	< 5.0	5.0	mg/l	1	12/30/11	JD	SM20 2320B
Alkalinity, Total as CaCO3	700	5.0	mg/l	1	12/30/11	JD	SM20 2320B
BOD, 5 Day	262	10	mg/l	1	12/23/11 11:00	JK	SM20 5210B
Bromide	56.9	8.0	mg/l	40	12/23/11 16:25	NS	EPA 300/SW846 9056
Carbon Dioxide	308	5.0	mg/l	1	12/30/11	JD	SM20 4500CO2D
Chemical Oxygen Demand	721	100	mg/l	10	01/05/12	CJ	SM20 5220D
Chloride	7420	250	mg/l	500	12/23/11 16:39	NS	EPA 300/SW846 9056
Density by Hydrometer	1.0108		g/ml	1	01/04/12	CJ	ASTM D287
Fluoride	34.6	20	mg/l	100	01/09/12 13:03	NS	EPA 300/SW846 9056
HEM Oil and Grease	11.0	4.8	mg/l	1	01/09/12	SWT	EPA 1664A
Hardness, Total as CaCO3 [a]	759	1.8	mg/l	1	12/28/11 17:46	JB	SM20 2340B
Hydrogen Sulfide	< 0.50	0.50	mg/l	1	12/28/11	JK	SM20 4500 S2 H
Nitrogen, Ammonia	5.2	0.10	mg/l	1	12/30/11	JK	SM20 4500NH3 D
Nitrogen, Nitrate [b]	< 0.90	0.90	mg/l	20	12/23/11 11:05	NS	EPA 300/SW846 9056
Oxygen, Dissolved	< 1.0	1.0	mg/l	1	12/23/11 11:00	CJ	SM20 4500-OG
Phosphorus, Total	0.48	0.010	mg/l	1	01/03/12	CJ	HACH8190/SM4500P-B/E
Solids, Total Dissolved	14200	10	mg/l	1	12/27/11	JK	SM20 2540C
Solids, Total Suspended	97.0	5.0	mg/l	1	12/28/11	JD	SM20 2540D
Specific Conductivity	21000	1.0	umhos/cm	1	12/27/11	JK	SM20 2510B
Sulfate [b]	< 10	10	mg/l	20	12/23/11 11:05	NS	EPA 300/SW846 9056
Total Organic Carbon	189	50	mg/l	100	01/10/12 12:29	NS	SM20 5310C
Turbidity	181	5.0	NTU	50	12/23/11 14:10	JD	SM20 2130B
pH	7.12		su	1	12/27/11 15:20	JK	SM20 4500H

(a) Calculated as: (Calcium * 2.497) + (Magnesium * 4.118)
(b) Elevated detection limit/MDL due to matrix interference.

RL = Reporting Limit

Report of Analysis

Client Sample ID:	POND-122211		
Lab Sample ID:	D30585-1F	**Date Sampled:**	12/22/11
Matrix:	AQ - Water Filtered	**Date Received:**	12/23/11
		Percent Solids:	n/a
Project:	NPR Monthly Sampling		

Dissolved Metals Analysis

Analyte	Result	RL	Units	DF	Prep	Analyzed	By	Method	Prep Method
Silicon	34.7	0.050	mg/l	1	12/28/11	12/28/11	JB	SW846 6010B [1]	SW846 3010A [2]

(1) Instrument QC Batch: MA2082
(2) Prep QC Batch: MP6562

RL = Reporting Limit

Report of Analysis

Client Sample ID:	POND-122211		
Lab Sample ID:	D30585-1F	**Date Sampled:**	12/22/11
Matrix:	AQ - Water Filtered	**Date Received:**	12/23/11
		Percent Solids:	n/a
Project:	NPR Monthly Sampling		

General Chemistry

Analyte	Result	RL	Units	DF	Analyzed	By	Method
Silica, Dissolved [a]	74.2	0.11	mg/l	1	12/28/11 19:27	JB	SW846 6010B
Sulfide	< 0.50	0.50	mg/l	1	12/28/11	JK	SM20 4500S2 CF

(a) Calculated as: (Silicon * 2.139)

RL = Reporting Limit

Letter Of Transmittal

UniversalPegasus
INTERNATIONAL

CLIENT AFE 11153681

Date: 5-Jan-12
To: Mr. Kevin McDowell
Company: Encana Oil & Gas (USA), Inc.
Address: Republic Plaza
370 17th Street, Suite 1700
Denver, CO 80202

Transmittal Number: 18675-100-XMT-002
From: Glen Bancroft
Company: UniversalPegasus
RE: W.F. Parachute Creek - A15 Well Pad
Produced Water Pit Modifications
Issued for Construction (IFC) Package
UPI Project Number: 18675

Phone Number: 720.876.5836

SENDING:

- [x] **Via Email**
- [x] **Attached**
- [x] **Drawings**
- [ ] Material Requisition
- [ ] Vendor Dwgs
- [ ] Via Fax
- [ ] Under Separate Cover
- [ ] Letter
- [ ] Purchase Order
- [ ] Vendor Data
- [ ] Via USPS
- [ ] Change Order
- [ ] Quotes
- [ ] Original
- [ ] Via FedEx (Tracking No.) _____
- [ ] Data Sheets
- [ ] Estimate
- [ ] _____
- [ ] Via Courier _____
- [x] **Specifications**
- [ ] Schedule
- [ ] _____

ITEM	QTY	DOCUMENT NUMBER	DESCRIPTION
1	1	18675-520-SIT-32201	Drawing - Topographic Property Plan
2	1	18675-520-SIT-32202	Drawing - Location and Grading Plan
3	1	18675-520-DTL-32401	Drawing - Civil Details
4	1	18675-520-DTL-32402	Drawing - Civil Details
5	1	18675-520-SPC-001	Performance Specification for Earthwork and Pit Construction
6	1	18675-520-SPC-002	Performance Specification for Geosynthetic Clay Liner
7	1	18675-520-SPC-003	Performance Specification for Geocomposite Drainage Layer
8	1	18675-520-SPC-004	Performance Specification for Geomembrane Liner
9			
10			
11			
12			

THESE ARE TRANSMITTED AS MARKED BELOW:

- [ ] Issue for Review & Comment
- [ ] For Your Use or As Requested
- [ ] Return for Approval
- [ ] Issue for Approval
- [ ] Approved as Submitted
- [ ] Submit for Distribution
- [ ] Issue for Bid
- [ ] Approved as Noted
- [ ] **Return by** Xmtl Date (Date)
- [x] Issue for Construction
- [ ] Return for Revision

REMARKS: Please contact me if you have any questions or comments.

Received
SIGNED: DATE:
Please sign above then promptly scan and return

Sent
SIGNED: Glen Bancroft
TITLE: Project Manager
EMAIL: glen.bancroft@universalpegasus.com

COPY TO: File

DOCUMENT No. 18675-520-SPC-001

PERFORMANCE SPECIFICATION FOR EARTHWORK AND PIT CONSTRUCTION

ENCANA OIL & GAS (USA), INC. – SRBU N. PICEANCE

W.FORK PARACHUTE CREEK – A15 WELL PAD PRODUCED WATER PIT MODIFICATION PROJECT

GARFIELD COUNTY, COLORADO

Engineer Stamp:

Approvals:

	By:	Date:
Initiator:	G. Bancroft	11/23/11
Mechanical:		
Civil:	G. Mostofa	11/23/11
Electrical:		
Instrument:		
Project. Mgr.:	G. Bancroft	11/23/11
Client:		

encana natural gas

Revisions:

Rev.:	Date:	By:	Approval:
0	1/05/12	GDB	GDB

THIS DOCUMENT IS SOLELY FOR THE USE OF THE CONTRACTUAL CLIENT AND VENDORS OF UNIVERSALPEGASUS INTERNATIONAL. UNIVERSAL ASSUMES NO LIABILITY TO ANY OTHER PARTY FOR ANY REPRESENTATIONS CONTAINED IN THIS DOCUMENT.

1. GENERAL

1.1. SCOPE

1.1.1. This specification covers the technical requirements for earthwork and pit construction for the produced water pit modification project at the A15 Well Pad. The project site is located adjacent to the West Fork of Parachute Creek, in the Piceance Basin, Garfield County, Colorado. All materials shall meet or exceed the requirements of this specification, and all work shall be performed in accordance with the procedures provided in these project specifications.

1.1.2. This specification covers the general earthwork and pit construction required for constructing a double synthetic lined pit with leak detection system, in accordance with Paragraph 904.c(3) of the Colorado Oil & Gas Conservation Commission, E&P Waste Management Rules.

1.1.3. Related project specifications

- 18675-520-SPC-002 GEOSYNTHETIC CLAY LINER
- 18675-520-SPC-003 GEOCOMPOSITE DRAINAGE LAYER
- 18675-520-SPC-004 GEOMEMBRANE LINER

1.1.2. This specification establishes the quality of materials and workmanship for furnishing, delivering, installing and constructing hard material subgrade and standard leak detection wells for double-lined systems.

1.2. REFERENCES

1.2.1. 29 CFR – United States Code of Federal Regulations

- Part 1910 Occupational Safety and Health Standards
- Part 1926 Safety and Health Regulations for Construction

1.2.2. American Society for Testing and Materials (ASTM)

- ASTM D 422 Standard Method of Test for Particle-Size/Analysis of Soil
- ASTM D 698 Standard Test Methods for Laboratory Compaction Characteristics of Soil Using Standard Effort
- ASTM D 2487 Standard Test Methods for Classification of Soils for Engineering Purposes
- ASTM D 2488 Standard Practice for Description and Identification of Soils (Visual-Manual Procedure)
- ASTM D 3740 Evaluation of Agencies Engaged in Testing and/or Inspection of Soil and Rock as used in Engineering Design and Construction

- ASTM D 7382 Standard Test Methods for Determination of Maximum Dry Unit Weight and Water Content Range for Effective Compaction of Granular Soils Using a Vibrating Hammer

1.2.3. Colorado Oil & Gas Conservation Commission (COGCC)

- 900 Series Rules, "E&P Waste Management"

1.3. DEFINITIONS

1.3.1. CQA INSPECTOR - Construction Quality Assurance Inspector, independent from CONTRACTOR that is responsible for observing and documenting activities related to quality assurance during the earthwork and pit construction. The CQA INSPECTOR may be the OWNER's Representative or an independent agent hired by the OWNER.

1.3.2. ENGINEER - The individual or firm responsible for the design and preparation of the project's Contract Drawings and Specifications.

1.3.3. CONTRACTOR- Party responsible for earthwork and pit construction, including excavation, stockpiling, filling, compaction, and finish grading.

1.3.4. OWNER - Shall mean Encana Natural Gas.

1.3.5. GEOTECHNICAL ENGINEER – The individual or firm responsible for performing the site geotechnical investigation and preparation of the project soils report.

1.3.6. TESTING LABORATORY – Soil Testing Laboratory, independent from the CONTRACTOR, responsible for conducting laboratory tests on soil samples obtained at the site or during excavation, filling, and compaction, under the direction of the GEOTECHNICAL ENGINEER.

1.4. QUALITY ASSURANCE

1.4.1. The OWNER will engage and pay for the services of a CQA INSPECTOR, GEOTECHNICAL ENGINEER, and TESTING LABORATORY to monitor earthwork and pit construction, and provide required testing.

1.5. QUALIFICATIONS

1.5.1. CONTRACTOR

- CONTRACTOR shall have worked in a similar capacity on at least 5 projects similar in complexity to the project described in the contract documents.
- The CONTRACTOR's Site Supervisor shall have worked in a similar capacity on projects similar in size and complexity to the project described in the Contract Documents.

1.6. FIELD QUALITY ASSURANCE

1.6.1. Quality assurance during preparation of hard material subgrade shall be performed by a CQA INSPECTOR on behalf of the ENGINEER. Inspections performed during construction shall be documented and the subgrade shall be approved by the ENGINEER prior to placement of the liner system.

1.6.2. The OWNER shall engage in a third part independent inspection firm for the CQA INSPECTOR.

2. MATERIALS

2.1. BORROW/FILL MATERIAL

2.1.1. Material for subgrade shall consist of the naturally occurring clay, silt, sand, and gravel, shaped to the lines and grades on the drawings. The side slopes and bottom of the excavation shall be shaped with aggregate less than 1 inch in diameter in a manner that is smooth and does not allow for protrusion of material greater than ½ inch from the planar surface of the side slopes and bottom of the pit.

2.1.2. Drill cuttings mixed with fly ash and wood chips or drill cuttings alone may be used to provide a smooth finish to the subgrade for placement of the geosynethic clay liner material. Such cuttings must have passed the testing required by Table 910-1 of the COGCC E&P Waste Management Standards.

2.1.3. Class 2 Backfill is defined as all soils and rock excavated at the site with a diameter of less than 2 inches. Suitable equipment or approved procedures shall be provided to ensure the maximum dimension is not exceeded.

2.2. LEAK DETECTION WELL

2.2.1. The leak detection observation well shall consist of an 8 inch diameter HDPE pipe,pe rforated at the bottom end as shown on the drawings. The observation well pipe shall be sealed from the primary liner with a pipe boot. A removable cap shall be provided above grade as shown on the drawings.

2.2.2. A minimum 4-ft x 4-ft x 16-in deep sump pit filled with 3/8 inch washed pea gravel and wrapped with 6-oz non-woven/non-woven geocomposite (see related specification) shall be placed at the low point of the pond and at the bottom end of the leak detection well.

2.3. SITE CONDITIONS

2.3.1. Data on indicated subsurface conditions is made available for the convenience of the earthwork contractor and is not intended as representations or warranties of continuity of such conditions.

2.3.2. Protect existing benchmarks, monuments, and other reference points; if disturbed or destroyed, replace as directed by OWNER.

2.3.3. Erect and maintain such safeguards as required by construction operations, codes, or existing conditions, for the safety of persons or property,an d to protect the same from damage, injury, or loss. Labor safety regulations set forth in OSHA 29-CFR Parts 1910 and 1926 shall apply to all work performed.

2.3.4. Provide for diversion of surface drainage during the period of earthwork, keeping excavations free of water during entire process of work, regardless of cause, source or nature of the water.

3. EXECUTION

3.1. FAMILIARIZATION

3.1.1. Inspection

- Prior to implementing any of the work, the CONTRACTOR shall carefully inspect and verify the existing site conditions that may affect his work.
- If there is conflict between the project drawings and specifications, the more stringent requirement shall apply.
- If the existing site conditions to not match the drawings or specifications, the CONTRACTOR shall notify the ENGINEER.

3.2. EQUIPMENT

3.2.1. Excavating and grading equipment shall be of appropriate size and type for the proposed usage.

3.2.2. See related project specifications for finish surface requirements for preparation for geosynthetics installation.

3.3. SURVEY

3.3.1. The CONTRACTOR shall establish all necessary control points for execution of the work. The CONTRACTOR shall be responsible for all construction surveying to control the work.

3.3.2. Cross-sections of the final as-built condition will be taken as directed.

3.3.3. Prior to installation of any geosynthetics, CONTRACTOR shall verify with grading level that the pit side slopes are at or below maximum slope indicated on the drawings, the bottom of the pit slopes as designed for leak detection system, and the pit depth and general layout is per the drawings.

3.3.4. All survey work will be subject to checking by the OWNER.

3.4. CLEARING AND GRUBBING

3.4.1. Existing pit shall be drained and the existing liner system removed prior to construction. OWNER will identify point of discharge.

3.4.2. Existing fencing, bollards, and netting will be removed prior to the start of work to allow for proper reshaping of the existing pit.

3.4.3. Fluids, solids, and existing liners removed from the existing pit shall be disposed of by the CONTRACTOR, at the waste location(s) identified and approved by OWNER.

3.4.4. Clearing and grubbing shall be performed as required. Clearing will consist of the removal and disposal of all brush, grass, rubbish, and other obstructions resting on the surface of the original ground. Unless otherwise indicated, clearing shall be performed within the limits of and ten feet outside of the construction area. Grubbing shall be performed within all areas of construction. Cleared and

grubbed materials shall be removed from the jobsite and disposed of by the CONTRACTOR at the waste location(s) identified and approved by the OWNER.

3.5. DUST CONTROL

3.5.1. Apply water or chemical agent for the control of airborne dust originating as a result of earthwork operations in accordance with applicable local ordinances and regulations. Chemicals, if utilized, are to be approved in advance of use by field.

3.6. EXCAVATION

3.6.1. Classification of all excavated materials shall be included in the following:

- Common and Rippable Excavation – for purposes of classification of excavation, Common and Rippable Excavation shall consist of all materials that can be excavated without blasting. Rippable excavation shall consist of all materials that can be effectively loosened or broken down by ripping in a single pass with a late model tractor-mounted hydraulic ripper equipped with one digging point of standard manufacturer's design adequately sized for use with and propelled by a crawler-type tractor rated equal to or better than a D-9 Caterpillar flywheel horsepower, operating in low gear. Additionally, all boulders or detached pieces of solid rock less than 2 cubic yards in volume will be classified as Common and Rippable Excavation.
- Rock Excavation – For the purpose of classification of excavation, rock is defined as sound and solid masses, layers, or ledges of mineral matter in place and of such hardness and texture thatit cannot be effectively loosened or broken down by a hydraulic ripper specified above. Testing to determine compliance with this classification shall be made when requested. All boulders or detached masses of solid rock larger than 2 cubic yards in volume will be classified as rock.

3.6.2. Suitable excavated materials conforming to the requirements of this section shall be utilized in backfills. Unsuitable material within the limits of excavation shall be removed and disposed of as waste. Unsuitable material defined as material that is greater than 2 inches in diameter, organic materials and debris of any kind, or any material that is protruding from the planar surface of the bottom of the pit, side slopes of the pit, and within the anchor trench. Unsuitable or excess excavated material shall be disposed of by the CONTRACTOR at OWNER's designated waste locations.

3.6.3. The method of excavation shall not weaken surrounding areas or damage structures or parts thereof that are completed or under construction. Existing structures and utilities adjacent to excavations shall be protected and supported to prevent displacement.

3.6.4. Excavations shall conform within the tolerances specified to the lines, grades, sections and elevations shown on the drawings.

3.6.5. Unless otherwise indicated on the drawings, grading tolerances shall be zero to minus four inches for horizontal and sloped planes of excavation in earth and zero to minus six inches for horizontal and sloped planes of excavation in rock.

3.6.6. Over-excavated areas within the pit area shall be restored with properly compacted Class 2 material to the elevations shown on drawings. Compaction equipment shall be suitable for the size and depth of the holes being filled.

3.6.7. If any areas outside of the pit area are over-excavated in rock, the over-excavation shall be restored by backfilling spaces under and adjacent to footings, foundations,or other bearing portions of structures with controlled low strength material having a 28-day compressive strength of 150 psi. Restoration of over – excavated areas in rock and soil shall provide uniform bearing values at least equivalent to that previously given by the excavation prior to the over excavation.

3.6.8. Areas being excavated and areas to be backfilled shall be maintained in a clean condition free from debris.

3.7. STOCKPILING

3.7.1. As part of the earthwork operations, stockpiling of excavated or borrowed material may be required.

3.7.2. Approved fill materials and bedding materials shall be stockpiled separately.

3.7.3. Soil stockpiles and waste material shall be placed in such a manner to provide natural drainage and a stable embankment as approved by the OWNER.

3.7.4. Stockpiles shall be constructed with maximum height not exceeding 40 feet.

3.7.5. Location of stockpiles shall be determined by the OWNER.

3.8. BACKFILL AND COMPACTION

3.8.1. Approved fill material shall be placed in thin, loose lifts of 8 inches thick or less, moisture conditioned to within 3 percent of optimum moisture content, and compacted to at least 95 percent of maximum standard Proctor dry density as measured by ASTM D698. Placement and compaction of fill shall be observed and tested by a representative of the GEOTECHNICAL ENGINEER.

3.8.2. Bottom and side slopes of excavation shall be rolled to ensure that no soft or loose spots remain. Care must be taken to ensure that tracks compact evenly and do not "bridge" between hard points, leaving uncompacted material in between.

3.8.3. Existing fill material at the job site may require mixing and/or additional of fine material in order to achieve specified compacted dry density, as directed by the representative of the GEOTECHNICAL ENGINEER.

3.9. ANCHOR TRENCH

3.9.1. Liner runout and anchor trench shall be constructed to the dimensions as indicated on the drawings. The subgrade surface of the anchor trench and runout shall be of the same material as the side slope of the pit, and shall be smooth for placement of the liner system. Subgrade shall be inspected by the GEOTECHNICAL ENGINEER prior to placement of liner materials.

3.9.2. Class 2 Backfill, as defined herein shall be used to backfill over the liner runout and in the anchor trench.

3.9.3. Approved fill material shall be placed in thin, loose lifts of 8 inches thick or less, moisture conditioned to within 3 percent of optimum moisture content, and compacted to at least 95 percent of maximum standard Proctor dry density as measured by ASTM D698. Placement and compaction of fill shall be observed and tested by a representative of the GEOTECHNICAL ENGINEER.

3.9.4. Tolerance for final grade over runout and anchor trench shall be minus zero to plus two inches.

3.10. PIPE TRENCH EXCAVATION

3.10.1. The pipe location for the leak detection system shall be over excavated.

3.10.2. The bottom and sides of the trench shall be finished as required for the pit subgrade and with similar surface treatment.

3.10.3. The bottom geocomposite clay liner (GCL) and secondary HDPE liner shall deform into the trench beneath a lapped geocomposite layer.

3.10.4. The pipe shall be installed and trench backfilled with Class 2 backfill or approved drill cuttings up to and flush with the pit side walls, so that the pipe rests in bedding material, as indicated on the drawings.

- The pipe shall be onsite and used to test the slope of the trench to ensure a uniform slope to the top.
- No bends will be allowed in the pipe.

3.10.5. A second geocomposite layer shall be installed over the trench backfill material such that the backfill material is completely encapsulated by geocomposite material, as indicated on the drawings. Ensure that the primary liner is not significantly deformed over the pipe or mounded over the trench backfill.

3.11. LEAK DETECTION SUMP WELL

3.11.1. The sump well location for the leak detection system shall be over excavated. The leak detection sump shall be excavated so as to provide the cover, bedding depth, and minimum dimensions as shown on the drawings.

3.11.2. The bottom and sides of the well shall be finished as required for the pit subgrade and with similar surface treatment.

3.11.3. The bottom geocomposite clay liner (GCL) and secondary HDPE liner shall deform into the well beneath a lapped geocomposite layer.

3.11.4. The pipe shall be installed and well backfilled with washed 3/8 inch pea gravel up to and flush with the pit bottom, as indicated on the drawings.

- The pipe shall be be secured in place so as not to be moved during backfilling operations.

3.11.5. A second geocomposite layer shall be installed over the sump gravel bed such that the gravel bed is completely encapsulated by geocomposite material, as indicated on the drawings. Ensure that the primary liner is not significantly mounded over the sump well gravel bed.

3.12. RESHAPING AND GRADING EXISTING IMPROVEMENTS

3.12.1. Prior to commencing finish grading, existing improvements shall be checked for their compliance with rough grading requirements shown on the drawings and restored to original lines, grade, and cross section, if required.

3.12.2. Clean and reshape previously constructed ditches of sediment and debris to original lines, grade, and cross section.

3.12.3. Clean all previously constructed culverts of sediment and debris.

3.13. FINISH GRADING

3.13.1. The bottom of the pit shall be graded to drain to the leak detection system sump pit, as indicated on the drawings.

3.13.2. Benching of Sloped Surfaces:

- Pit side slopes shall be no steeper than 1.5 to 1 (horizontal to vertical) as indicated on the drawings.
- Tolerance for side slopes will be 2 inches in a 4 foot length of straight edge provided the transitions are smooth curves.

3.13.3. Surface Preparation:

- Liner system materials shall not be placed in direct contact with rock under any circumstances.
- Where rock is exposed at the final finish grades under liner system, the rock shall be overexcavated a minimum of 6 inches and backfilled with clean drill cuttings.
- Existing rippable hard material on the exposed surface of the pit bottom and side slopes shall be reduced in size to a maximum of 1 inch in diameter.
- Ensure that there are no rock protrusions more than ½ inch above the planar surface of the pit bottom, side walls, and anchor trench. Reduction of this rock shall be done with the most appropriate means and methods available, such as crushing, tracking, ripping, or the use of compaction equipment. Large or very hard materials which are resistant to crushing with available equipment may require removal or reduction with special equipment.

3.13.4. Filling Holes, Depressions and Cavities:

- Depressions and other cavities shall be filled in with Class 2 material or clean drill cutting to the elevations of the pit bottom and side slopes indicated on the drawings.
- Crushed rock of less than 1 inch in diameter may also be used to fill in holes, depressions, and cavities. Compaction equipment shall be suitable for the size and depth of the holes being filled.

3.13.5. Finish Grading Tolerances:

- The finish grade tolerance shall be plus zero and minus four inches to the lines and grades as indicated on the drawings.
- Areas not within the allowable tolerances shall be corrected by breaking, scarifying, placing additional material, remixing, and respacing to the specifications herein.

3.14. CLEANUP

3.14.1. Leave work area in a clean and neat condition. Grade all disturbed surfaces to prevent standing surface water.

DOCUMENT No. 18675-520-SPC-002

PERFORMANCE SPECIFICATION FOR GEOSYNTHETIC CLAY LINER

ENCANA OIL & GAS (USA), INC. – SRBU N. PICEANCE

W.FORK PARACHUTE CREEK – A15 WELL PAD PRODUCED WATER PIT MODIFICATION PROJECT

GARFIELD COUNTY, COLORADO

Engineer Stamp:

Approvals:

	By:	Date:
Initiator:	G. Bancroft	11/23/11
Mechanical:		
Civil:	G. Mostofa	11/23/11
Electrical:		
Instrument:		
Project. Mgr.:	G. Bancroft	11/23/11
Client:		

encana natural gas

Revisions:

Rev.:	Date:	By:	Approval:
0	1/05/12	GDB	GDB

THIS DOCUMENT IS SOLELY FOR THE USE OF THE CONTRACTUAL CLIENT AND VENDORS OF UNIVERSALPEGASUS INTERNATIONAL. UNIVERSAL ASSUMES NO LIABILITY TO ANY OTHER PARTY FOR ANY REPRESENTATIONS CONTAINED IN THIS DOCUMENT.

1. GENERAL

1.1. SCOPE

1.1.1. This specification covers the technical requirements for the Manufacturing and Installation of the fabric-encased geosynthetic clay liner (GCL) to be used for the produced water pit modification project at the A15 Well Pad. The project site is located adjacent to the West Fork of Parachute Creek, in the Piceance Basin, Garfield County, Colorado. All materials shall meet or exceed the requirements of this specification, and all work shall be performed in accordance with the procedures provided in these project specifications.

1.1.2. The GCL shall be utilized as synthetic matting-type padding beneath a double synthetic liner system, in accordance with Paragraph 904.c(3) of the Colorado Oil & Gas Conservation Commission, E&P Waste Management Rules.

1.1.3. Related project specifications

- 18675-520-SPC-001 EARTHWORK AND PIT CONSTRUCTION
- 18675-520-SPC-003 GEOCOMPOSITE DRAINAGE LAYER
- 18675-520-SPC-004 GEOMEMBRANE LINER

1.2. REFERENCES

1.2.1. American Society for Testing and Materials (ASTM)

- ASTM D 4632, "Standard Test Method for Grab Breaking Load and Elongation of Geotextiles"
- ASTM D 4643, "Determination of Water (Moisture) Content of Soil by the Microwave Oven Method"
- ASTM D 5084, "Standard Test Method for Measurement of Hydraulic Conductivity of Saturated Porous Materials Using a Flexible Wall Permeameter"
- ASTM D 5261, "Standard Test Method for Measuring Mass Per Unit Area of Geotextiles"
- ASTM D 5321, "Determining the Coefficient of Soil and Geosynthetic or Geosynthetic and Geosynthetic Friction by the Direct Shear Method"
- ASTM D 5887, "Measurement of Index Flux Through Saturated Geosynthetic Clay Liner Specimens Using a Flexible Wall Permeameter"
- ASTM D 5888, "Standard Guide for Storage and Handling of Geosynthetic Clay Liners"
- ASTM D 5889, "Standard Practice for Quality Control of Geosynthetic Clay Liners"
- ASTM D 5890, "Standard Test Method for Swell Index of Clay Mineral Component of Geosynthetic Clay Liners"

- ASTM D 5891, "Standard Test Method for Fluid Loss of Clay Component of Geosynthetic Clay Liners"
- ASTM D 5993, "Standard Test Method for Measuring Mass Per Unit of Geosynthetic Clay Liners"
- ASTM D 6102, "Standard Guide for Installation of Geosynthetic Clay Liners"
- ASTM D 6243, "Standard Test Method for Determining the Internal and Interface Shear Resistance of Geosynthetic Clay Liner by the Direct Shear Method"
- ASTM D 6496, "Standard Test Method for Determining Average Bonding Peel Strength Between the Top and Bottom Layers of Needle-Punched Geosynthetic Clay Liners"
- ASTM D 6768, "Standard Test Method for Tensile Strength of Geosynthetic Clay Liners"
- ASTM E 96, "Standard Test Methods for Water Vapor Transmission of Materials"

1.2.2. Colorado Oil & Gas Conservation Commission (COGCC)

- 900 Series Rules, "E&P Waste Management"

1.3. DEFINITIONS

1.3.1. CQA INSPECTOR - Construction Quality Assurance Inspector, independent from MANUFACTURER and INSTALLER that is responsible for observing and documenting activities related to quality assurance during the lining system construction. The CQA INSPECTOR may be the OWNER's Representative or an independent agent hired by the OWNER.

1.3.2. ENGINEER - The individual or firm responsible for the design and preparation of the project's Contract Drawings and Specifications.

1.3.3. INSTALLER- Party responsible for field handling, transporting, storing, deploying, and seaming the geosynthetic clay liner.

1.3.4. MANUFACTURER - The party responsible for manufacturing the geosynthetic clay liner rolls.

1.3.5. OWNER - Shall mean Encana Natural Gas.

1.3.6. TESTING LABORATORY - Geosynthetic Quality Assurance Laboratory, independent from the MANUFACTURER and INSTALLER, responsible for conducting laboratory tests on samples of geosynthetics obtained at the site or during manufacturing, usually under the direction of the OWNER.

1.3.7. Geosynthetic Clay Liner (GCL) - A factory manufactured hydraulic barrier consisting of granular sodium bentonite clay, sandwiched between, supported and encapsulated by two geotextiles, held together by needlepunching.

1.3.8. Geotextile - A semi-permeable woven or nonwoven fabric used to contain the bentonite used in a GCL.

1.3.9. Sodium Bentonite - The high swelling clay component of GCLs consisting primarily of the mineral Montmorillonite.

1.3.10. Needlepunching - A GCL manufacturing process whereby boards of barbed needles incorporate the staple fibers from a nonwoven geotextile, through a sodium bentonite clay layer, into the matrix of a second geotextile layer.

1.3.11. Thermal Fusing - A needlepunching enhancement process utilizing heat to bond the needlepunched fibers and more permanently lock them into the second geotextile to increase the internal shear strength characteristics.

1.3.12. Minimum Average Roll Value (MARV) - The minimum average value of the material in a particular lot calculated as the mean of the tested values minus two standard deviations providing a 95% confidence level.

1.4. SUBMITTALS

1.4.1. Pre-Award

- Manufacturer's Quality Control Manual
- Manufacturer's Product Datasheet for proposed material
- Project Reference List for GCL consisting of at least ten projects totaling 10 million square feet in size.
- A representative sample, approximately 3" x 5" of proposed GCL

1.4.2. Post-Award

- Prior to shipping material to site
  - Certification of quality control tests from manufacturer of GCL product
  - Certification of quality control tests from manufacturer of Bentonite
- Prior to installing GCL
  - Certification signed by the Contractor and CQA INSPECTOR of subgrade acceptance
- Upon completion of GCL installation
  - Certification by Installer that the GCL was installed per project specifications
  - Material and Installation Warranties
  - As-built drawings showing actual GCL placement

1.5. CONSTRUCTION QUALITY ASSURANCE (CQA)

1.5.1. The OWNER will engage and pay for the services of a third party CQA INSPECTOR and lab for monitoring the quality and installation of the GCL.

1.5.2. The specific CQA INSPECTOR designated by the OWNER shall be responsible for all aspects of the QA program, including the documentation and monitoring of the manufacturing and installation processes.

1.6. QUALIFICATIONS

1.6.1. Manufacturer

- GCL shall be manufactured by one of the following:
  - GSE Lining Technology, Inc.
  - CETCO Lining Technologies, Inc.
  - Engineer approved equal
- MANUFACTURER shall have manufactured a minimum of 10 million square feet of GCL during the last year.

1.6.2. Installer

- Installation shall be performed by one of the following installation companies:
  - MANUFACTURER Approved Installer
  - Engineer approved equal
- Installer shall have experience installing GCLs on at least 5 projects and have installed a minimum of 2 million square feet of GCL materials.

1.7. DELIVERY, STORAGE & HANDLING

1.7.1. General: Conform to the MANUFACTURER'S requirements and ASTM D5888 unless otherwise specified.

1.7.2. Delivery:

- Deliver material to the site only after the CQA INSPECTOR accepts required submittals.
- Material shall be covered with a waterproof plastic covering resistant to ultraviolet degradation.
- Ship less than two weeks prior to scheduled installation unless otherwise approved by engineer.
- Each roll shall be marked with the manufacturer's name, product identification, and roll number.

1.7.3. Handling:

- The CQA INSPECTOR shall verify that proper handling equipment exists which does not pose any danger to installation personnel or risk of

damage or deformation to the liner material itself. Suitable handling equipment is described below:

- Spreader Bar Assembly - A spreader bar assembly shall include both a core pipe or bar and a spreader bar beam. The core pipe shall be used to uniformly support the roll when inserted through the GCL core while the spreader bar beam will prevent chains or straps from chafing the roll edges.
- Stinger - A stinger is a rigid pipe or rod with one end directly connected to a forklift or other handling equipment. If a stinger is used, it should be fully inserted to its full length into the roll to prevent excessive bending of the roll when lifted.
- Roller Cradles - Roller cradles consist of two large diameter rollers spaced approximately 3 inches apart, which both support the GCL roll and allows it to freely unroll. The use of roller cradles shall be permitted if the rollers support the entire width of the GCL roll.
- Straps – A properly structured and supported pole or "carpet puller" can be used to unload GCL rolls onsite. As an alternative, straps that are appropriately rated can be used as an approved lifting method to unload GCL rolls.

1.7.4. Storage:

- Store rolls in space allocated by OWNER. Space should be at high ground level or elevated above ground surface.
- Stack no more than 3 rolls high.
- Protect rolls from UV, precipitation, other sources of moisture, mud, dirt, dust, puncture, cutting or any other damaging or deleterious conditions.
- An additional tarpaulin or plastic sheet shall be used over the stacked rolls to provide extra protection for GCL material stored outdoors.
- Preserve integrity and readability of roll labels.
- Bagged bentonite material shall be stored and tarped next to GCL rolls unless other more protective measures are available. Bags shall be stored on pallets or other suitably dry surface which will prevent undue prehydration.

1.7.5. GCL Inspection upon Delivery:

- Each roll shall be visually inspected when unloaded to determine if any packaging or material has been damaged during transit.
- Repairs to damaged GCL shall be performed in accordance with Section 3.7 of this specification.
  - Rolls exhibiting damage shall be marked and set aside for closer examination during deployment.

- Minor rips or tears in the plastic packaging shall be repaired with moisture resistant tape prior to being placed in storage to prevent moisture damage.
- GCL rolls delivered to the project site shall be only those indicated on GCL manufacturing quality control certificates.
- For needlepunched GCLs, the presence of free-flowing water within the packaging shall require that roll to be set aside for further examination to ascertain the extent of damage, if any. Free-flowing water within the packaging of unreinforced GCLs shall be cause for rejection of that roll.

1.8. WARRANTY

1.8.1. Material shall be warranted, on a pro-rata basis against Manufacturer's defects for a period of 5 years from the date of geomembrane installation.

1.8.2. Installation shall be warranted against defects in workmanship for a period of 1 year from the date of geomembrane completion.

2. PRODUCT

2.1. QUALIFICATIONS

2.1.1. The GCL product supplied to the project shall be in full accordance with the requirements of this section.

2.1.2. The GCL shall be manufactured by mechanically bonding the geotextiles using a needlepunching process as described in Section 1.3 to enhance frictional and internal shear strength characteristics.

2.1.3. The needlepunched GCL shall thermally heat set the nonwoven fibers where they protrude from the second geotextile (woven or nonwoven depending upon product) to more permanently secure the reinforcement in place. Other means may be used to lock the fibers in place if the process demonstrates similar performance to the thermal heat set process.

2.1.4. In order to maintain these characteristics, no glues, adhesives or other non-mechanical bonding processes shall be used in lieu of the needlepunch process. Their use to enhance the physical properties of the GCL is permitted.

2.2. MATERIALS

2.2.1. Acceptable Products

- GSE BentoLiner NWL
- CETCO Bentomat DN
- Engineer approved alternative

2.2.2. Alternative Materials

- Prior to considering an alternative GCL material, the Contractor shall submit certified test results and statements of quality from the proposed GCL supplier to the engineer, indicating without exception that the proposed GCL meets the requirements of this specification. Submittals shall be delivered to the engineer a minimum of five business days in advance of the bid.

2.3. GCL PHYSICAL PROPERTIES

2.3.1. The GCL material shall be in accordance with the test methods, test frequencies and material physical properties as listed in Table 2.3.

2.3.2. Dimensions - The minimum acceptable dimensions for the GCL panels shall be 15 feet wide and 125 feet long. Short rolls (rolls less than 125 feet long) may be supplied, but at a rate not to exceed 5% of the total square footage produced for this project.

2.3.3. Overlap_Markings - A minimum overlap guide-line and a construction match-line delineating the overlap zone shall be imprinted with non-toxic ink on both edges of the GCL panel to ensure the accuracy of the seam. These lines shall be used during CQA to ensure the minimum overlap is achieved. The minimum overlap guideline shall indicate where the edge of the panel must be placed in order to achieve the correct overlap for each panel.

2.3.4. The GCL will have seam overlaps a minimum of 6 inches for all woven/nonwoven GCLs. GCL's comprised of a nonwoven/nonwoven geotextiles will have a minimum seam overlap of 6 inches for scrim reinforced and 12 inches minimum for all non-scrim reinforced nonwoven GCLs. End of panel or butt end seams shall be a minimum of 12 inches for all woven/nonwoven GCLs, 12 inches for all scrim-reinforced double nonwoven GCLs, and 24 inches for non-scrim reinforced double nonwoven GCLs.

2.3.5. Accessory Bentonite - Any accessory bentonite used for sealing seams, penetrations, or repairs, shall be the same granular bentonite as used in the production of the GCL itself.

Table 2.3: Geosynthetic Clay Liner

TESTED PROPERTY	TEST METHOD	FREQUENCY	VALUE (ENGLISH)	VALUE (SI)
GEOTEXTILE PROPERTY				
Cap Nonwoven, Mass/Unit Area	ASTM D 5261	1/200,000 ft^2 (1/20,000 m^2)	6.0 oz/yd^2 MARV[1]	200 g/m^2 MARV[1]
Carrier Scrim Nonwoven, Mass/Unit Area	ASTM D 5261	1/200,000 ft^2 (1/20,000 m^2)	6.0 oz/yd^2 MARV	200 g/m^2 MARV
BENTONITE PROPERTY				
Swell Index	ASTM D 5890	1/100,000 lb (50,000 kg)	24 ml/2 g min	24 ml/2 g min
Moisture Content	ASTM D 4643	1/100,000 lb (50,000 kg)	12% max	12% max
Fluid Loss	ASTM D 5891	1/100,000 lb (50,000 kg)	18 ml max	18 ml max
FINISHED GCL PROPERTY				
Bentonite, Mass/Unit Area[2]	ASTM D 5993	1/40,000 ft^2 (1/4,000 m^2)	0.75 lb/ft^2 MARV	3.66 kg/m^2 MARV
Tensile Strength[3]	ASTM D 6768	1/40,000 ft^2 (1/4,000 m^2)	45 lb/in MARV	7.8 kN/m MARV
Peel Strength	ASTM D 6496 ASTM D 4632[4]	1/40,000 ft^2 (1/4,000 m^2)	3.5 lb/in MARV 21 lb MARV	610 N/m MARV 93 N MARV
Hydraulic Conductivity[5]	ASTM D 5887	1/Week	5×10^{-11} m/sec max	5×10^{-11} m/sec max
Index Flux[5]	ASTM D 5887	1/Week	1×10^{-8} m^3/m^2/sec max	1×10^{-8} m^3/m^2/sec max
Internal Shear Strength[6]	ASTM D 6243	Periodically	500 psf Typical	24 kPa Typical
ROLL DIMENSIONS				
Width x Length[7]	Typical	Every Roll	15.5 ft x 150 ft	4.7 m x 45.7 m
Area per Roll	Typical	Every Roll	2,325 ft^2	216 m^2
Packaged Weight	Typical	Every Roll	2,600 lb	1,179 kg

NOTES:

- [1]Minimum Average Roll Value.
- [2]Oven-dried measurement. Equates to 0.84 lb/ft(4.1 kg/m) when indexed to a 12% moisture content.
- [3]Tested in machine direction.
- [4]Modified ASTM D 4632 to use a 4 in (100 mm) wide grip. The maximum peak of five specimens averaged in machine direction.
- [5]Deaired, deionized water @ 5 psi (34.5 kPa) maximum effective confining stress and 2 psi (13.8 kPa) head pressure.
- [6]Typical peak value for specimen hydrated for 24 hours and sheared under a 200 psf (9.6 kPa) normal stress.
- [7]Roll widths and lengths have a tolerance of ±1%.

3. INSTALLATION

3.1. GENERAL

3.1.1. The following installation procedures are as specific as possible while recognizing that the specific requirements of the project may necessitate minor modifications. Significant deviations from these procedures shall be pre-approved by the project engineer or other designated party.

3.2. SUBGRADE PREPARATION

3.2.1. The subgrade upon which the GCL is to be installed shall be suitable for the placement of GCL material, subject to the following requirements:

- Earthen Subgrade - The surface upon which the GCL material will be installed shall be constructed, inspected, and tested in accordance with the Earthwork and Pit Construction Specification. The earthwork contractor shall provide written certification that the subgrade has been prepared in accordance with the project specifications.
- The surface upon which the GCL is installed shall be smooth and free of wheel ruts, debris, roots, sticks, and rocks larger than 1.0 in (25 mm). Site specific compaction requirements shall be followed in accordance with the project plans and specifications. At a minimum, the site shall be smooth rolled at the level of compaction such that installation equipment and other construction vehicle traffic do not cause rutting greater than 1.0 in (25 mm) deep. Furthermore, all protrusions extending more than 0.5 in (12 mm) from the subgrade shall be removed, crushed, or pushed into the subgrade.
- Immediately prior to deployment of the GCL, the subgrade shall be final compacted to fill in any remaining voids or desiccation cracks and to ensure that no sharp irregularities or abrupt elevation changes exist greater than 1.0 in (25 mm). The surfaces to be lined shall be maintained in this condition and free of standing water. GCL can be deployed on a frozen subgrade, if the subgrade would meet all the conditions as previously outlined if unfrozen. GCL cannot be deployed on snow or ice.
- The subgrade surface and preparation should be inspected and certified by the CQA INSPECTOR prior to GCL placement. Upon approval by the CQA INSPECTOR, it is the INSTALLER's responsibility to communicate to the CQA INSPECTOR any changes in the condition of the subgrade that might render it out of compliance with any of the requirements of the project specification or ASTM Standard D 6102.D.

3.3. ANCHOR TRENCH

3.3.1. An anchor trench shall be excavated by the INSTALLER to the lines and grades shown on the project drawings at the top of slopes.

- The anchor trench shall be constructed free of sharp edges or corners and maintained in a dry condition. No loose soil shall be permitted beneath the GCL within the trench.

- The anchor trench shall be inspected and approved by the CQA INSPECTOR prior to GCL placement, back-filling and compaction of the anchor key material.
- All GCL material installed on slopes shall be anchored in accordance with the project drawings to prevent potential GCL panel movement.

3.4. GCL PLACEMENT

3.4.1. GCL Material shall be placed in general accordance with the procedures specified below, or modified to account for site specific conditions.

- GCL Orientation - GCL panels are typically placed with the nonwoven side up (heat burnished side down) to maximize the shear strength characteristics. However, the heat burnished side up if it maximizes the shear strength characteristics of a site specific interface. In base or flat areas, the GCL does not require any particular orientation.
- GCL Panel Position - Where possible, all slope panels should be installed parallel to the maximum slope while panels installed in flat areas require no particular orientation.
- Panel Deployment - GCL materials shall be installed in general accordance with the procedures set forth in this section, subject to site-specific conditions which would necessitate modifications.
  - Deployment should proceed from the highest elevation to the lowest to facilitate drainage in the event of precipitation.
  - The GCL may be deployed on slopes by pulling the material from a suspended roll, or securing a roll end into an anchor trench and unrolling each panel as the handling equipment slowly moves backwards.
  - Deployment on flat areas shall be conducted in the same manner as that for the slopes, however, care should be taken to minimize "dragging" the GCL. Slip-sheet may be used to facilitate positioning of the liner while ensuring the GCL is not damaged from underlying sources.
  - The GCL will have seam overlaps a minimum of 6 inches for all woven/nonwoven GCLs. GCL's comprised of a nonwoven/nonwoven geotextile will have a minimum seam overlap of 6 inches for scrim reinforced and 12 inches minimum for all non-scrim reinforced nonwoven GCLs. End of panel or butt end seams shall be a minimum of 12 inches for all woven/nonwoven GCLs, 12 inches for all scrim-reinforced double nonwoven GCLs, 24 inches for non-scrim reinforced double nonwoven GCLs, and be free of wrinkles, folds or "fish-mouths".
  - The contractor shall only install as much GCL that can be covered at the end of the day. No GCL shall be left exposed overnight. The exposed edge of the GCL shall be covered by a

temporary tarpaulin or other such water resistant sheeting until the next working day.

3.5. SEAMING

3.5.1. Overlap Line

- Woven/Nonwoven and Scrim Reinforced Nonwoven GCLs
  - A 6-inch lap line and a 9-inch match line for scrim reinforced GCLs shall be imprinted on both edges of the upper geotextile component of the GCL to assist in installation overlap quality control. Lines shall be printed as continuous dashes in easily observable non-toxic ink.
- Non-Scrim Reinforced Nonwoven GCLs
  - A 12-inch lap line and 15-inch match line for non-scrim reinforced GCLs shall be imprinted on both edges of the upper geotextile component of the GCL to assist in installation overlap quality control. Lines shall be printed as continuous dashes in easily observable non-toxic ink.

3.5.2. Seams

- Woven/Nonwoven and Scrim Reinforced Nonwoven GCLs
  - Overlap seams shall be a minimum of six inches on panel edges and one foot on panel ends.
- Non-Scrim Reinforced Nonwoven GCLs
  - Overlap seams shall be a minimum of 12 inches on panel edges and 2 foot on panel ends.
- Loose granular bentonite shall be placed between panel overlaps at a rate of 0.25 pound per lineal foot.

3.6. DETAILING

3.6.1. Detail work, defined as the sealing of the liner to pipe penetrations, foundation walls, drainage structures, spillways, and other appurtenances, shall be performed as recommended by the GCL Manufacturer.

3.7. DAMAGE REPAIR

3.7.1. Prior to cover material placement, damage to the GCL shall be identified and repaired by the installer. Damage is defined as any rips or tears in the geotextiles, delamination of geotextiles, or a displaced panel.

3.7.2. Rip and Tear Repair (Flat Surfaces) - Rips or tears may be repaired by completely exposing the affected area, removing all foreign objects or soil, and by then placing a patch cut from unused GCL over the damage (damaged material may be left in place), with a minimum overlap of 12 inches on all edges. Accessory bentonite should be placed between the patch edges and the repaired

material at a rate of a quarter pound per lineal foot of edge spread in a continuous six inch fillet.

3.7.3. Rip and Tear Repair (Slopes) - Damaged GCL material on slopes shall be repaired by the same procedures above, however, the edges of the patch should also be adhered to the repaired liner with an adhesive to keep the patch in position during backfill or cover operations.

3.8. DISPLACED PANELS

3.8.1. Displaced panels shall be adjusted to the correct position and orientation. The adjusted panel shall then be inspected for any geotextile damage or bentonite loss. Damage shall be repaired by the above procedure.

3.9. PREMATURE HYDRATION

3.9.1. If the GCL is prematurely hydrated greater than 30% moisture, installer shall notify the CQA INSPECTOR and project engineer for a site specific determination as to whether the material is acceptable or if alternative measures must be taken to ensure the quality of the design.

3.10. COVER MATERIAL

3.10.1. The cover materials shall be compatible as well as suitable for use over the GCL, and placed in a manner appropriate to the particular subgrade. Regardless of the cover material, the uncovered edge of GCL panels shall be protected at the end of the working day with a waterproof sheet which is secured adequately with ballast.

3.10.2. Geosynthetic Cover - Precautions shall be taken to prevent damage to the GCL by restricting the use of heavy equipment over the liner system.

- Equipment - Installation of the overlying geosynthetic component can be accomplished through the use of lightweight, rubber-tired equipment such as a 4-wheel all-terrain vehicle (ATV). This vehicle can be driven directly on the GCL, provided the ATV makes no sudden stops, starts, or turns.
- Placement - Smooth HDPE may be dragged across the GCL surface with equipment or by hand labor during positioning. Similarly, the HDPE may be unrolled with the use of low ground pressure equipment.
- Use of Textured Liners - If a textured geomembrane is placed over the GCL, a slip sheet (such as 20-mil smooth HDPE) may first be placed over the GCL in order to allow the geomembrane to slide into its proper position. Once the overlying geomembrane is properly positioned, the slip-sheet shall be carefully removed paying close attention to avoiding any movement to the geomembrane.

3.11. ACTIVATION

3.11.1. If the GCL will be utilized for the control of non-aqueous phase liquids, prehydration may be necessary. The GCL manufacturer shall be contacted for these cases for site specific recommendations.

4. MEASUREMENT AND PAYMENT

4.1. Payment for GCL installation will be as per contract unit price per square foot, as measured parallel to liner surface, including designed anchor trench material and is based upon net lined area.

4.2. Net lined area is defined to be the true area of all surfaces to be lined plus designed burial in all anchor trenches, rubsheets, and sacrificial layers.

4.3. Prices shall include full compensation for furnishing all labor, material, tools, equipment, and incidentals.

4.4. Prices shall include all work involved in performing GCL installation completely as shown on the drawing, as specified herein, and as directed by the ENGINEER.

END OF SECTION

DOCUMENT No. 18675-520-SPC-003

PERFORMANCE SPECIFICATION FOR GEOCOMPOSITE DRAINAGE LAYER

ENCANA OIL & GAS (USA), INC. – SRBU N. PICEANCE

W.FORK PARACHUTE CREEK – A15 WELL PAD PRODUCED WATER PIT MODIFICATION PROJECT

GARFIELD COUNTY, COLORADO

Engineer Stamp:

Approvals:

	By:	Date:
Initiator:	G. Bancroft	11/23/11
Mechanical:		
Civil:	G. Mostofa	11/23/11
Electrical:		
Instrument:		
Project. Mgr.:	G. Bancroft	11/23/11
Client:		

encana natural gas

Revisions:

Rev.:	Date:	By:	Approval:
0	1/05/12	GDB	GDB

THIS DOCUMENT IS SOLELY FOR THE USE OF THE CONTRACTUAL CLIENT AND VENDORS OF UNIVERSALPEGASUS INTERNATIONAL. UNIVERSAL ASSUMES NO LIABILITY TO ANY OTHER PARTY FOR ANY REPRESENTATIONS CONTAINED IN THIS DOCUMENT.

1. GENERAL

1.1. SCOPE

1.1.1. This specification covers the technical requirements for the Manufacturing and Installation of the fabric-encased geocomposite drainage layer to be used for the produced water pit modification project at the A15 Well Pad. The project site is located adjacent to the West Fork of Parachute Creek, in the Piceance Basin, Garfield County, Colorado. All materials shall meet or exceed the requirements of this specification, and all work shall be performed in accordance with the procedures provided in these project specifications.

1.1.2. The geocomposite shall be utilized as a drainage underlayment for leak detection between primary and secondary geomembrane liners for a double synthetic liner system, in accordance with Paragraph 904.c(3) of the Colorado Oil & Gas Conservation Commission, E&P Waste Management Rules.

1.1.3. Related project specifications

- 18675-520-SPC-001 EARTHWORK AND PIT CONSTRUCTION
- 18675-520-SPC-002 GEOSYNTHETIC CLAY LINER
- 18675-520-SPC-004 GEOMEMBRANE LINER

1.2. REFERENCES

1.2.1. American Society for Testing and Materials (ASTM)

- ASTM D 1505-98 Standard Test Method for Density of Plastics by the Density-Gradient Technique
- ASTM D 1603-94 Standard Test Method for Carbon Black in Olefin Plastics
- ASTM D 4355-02 Standard Test Method for Deterioration of Geotextiles by Exposure to Light, Moisture and Heat in a Xenon Arc Type Apparatus
- ASTM D 4491-99 Standard Test Method for Water Permeability of Geotextiles by Permittivity
- ASTM D 4716-00 Standard Test Method for Determining the (In-Plane) Flow Rate Per Unit Width and Hydraulic Transmissivity of a Geosynthetic Using a Constant Head
- ASTM D 4751-99 Standard Test Method for Determining Apparent Opening Size of a Geotextile
- ASTM D 4833-88 (1996) Standard Test Method for Index Puncture Resistance of Geotextiles, Geomembranes and Related Products
- ASTM D 5035-95 Standard Test Method for Breaking Force and Elongation of Textile Fabrics (Strip Method)
- ASTM D 5199-99 Standard Test Method for Measuring Nominal Thickness of Geotextiles and Geomembranes

- ASTM D 5261-92 (1996) Standard Test Method for Measuring the Mass Per Unit Area of Geotextiles
- ASTM D7005-03 Determining The Bond Strength (Ply-Adhesion) of Geocomposites

1.2.2. Colorado Oil & Gas Conservation Commission (COGCC)

- 900 Series Rules, "E&P Waste Management"

1.2.3. Relevant publications from the Environmental Protection Agency (EPA):

- Daniel, D.E. and R.M. Koerner, (1993), Technical Guidance Document: Quality Assurance and Quality Control for Waste Containment Facilities, EPA/600/R-93/182.

1.3. DEFINITIONS

1.3.1. CQA INSPECTOR - Construction Quality Assurance Inspector, independent from MANUFACTURER and INSTALLER that is responsible for observing and documenting activities related to quality assurance during the lining system construction. The CQA INSPECTOR may be the OWNER's Representative or an independent agent hired by the OWNER.

1.3.2. ENGINEER - The individual or firm responsible for the design and preparation of the project's Contract Drawings and Specifications.

1.3.3. INSTALLER- Party responsible for field handling, transporting, storing and deploying the geocomposite.

1.3.4. MANUFACTURER - The party responsible for manufacturing the geosynthetic clay liner rolls.

1.3.5. OWNER - Shall mean Encana Natural Gas.

1.3.6. TESTING LABORATORY - Geosynthetic Quality Assurance Laboratory, independent from the MANUFACTURER and INSTALLER, responsible for conducting laboratory tests on samples of geosynthetics obtained at the site or during manufacturing, usually under the direction of the OWNER.

1.3.7. Lot- A quantity of resin (usually the capacity of one rail car) used to manufacture polyethylene geocomposite rolls. The finished rolls will be identified by a roll number traceable to the resin lot.

1.4. QUALIFICATIONS

1.4.1. MANUFACTURER

- Geocomposite shall be manufactured by the following:
  - GSE Lining Technology, Inc.
  - approved equal
- MANUFACTURER shall have manufactured a minimum of 10,000,000 square feet of polyethylene geocomposite material during the last year.

1.4.2. INSTALLER

- Installation shall be performed by one of the following installation companies (or approved equal):
  - GSE Lining Technology, Inc.
  - GSE Approved Dealer/ Installer
- INSTALLER shall have installed a minimum of 2,000,000 square feet of geocomposite in the last year.
- INSTALLER shall have worked in a similar capacity on at least 5 projects similar in complexity to the project described in the contract documents, and with in at least 50,000 square feet of geonet installation on each project.
- The Installation Supervisor shall have worked in a similar capacity on projects similar in size and complexity to the project described in the Contract Documents.

1.5. LABELING, DELIVERY, STORAGE AND HANDLING

1.5.1. Labeling - Each roll delivered to the site shall be wrapped and labeled by the MANUFACTURER. The label will identify manufacturer's name,pr oduct identification,len gth, width, and roll number.

1.5.2. Delivery - Rolls will be prepared to ship by appropriate means to prevent damage to the material and to facilitate off-loading.

1.5.3. Storage - The on-site storage location provided by the CONTRACTOR to protect the geonet from abrasions, excessive dirt and moisture shall be level (no wooden pallets), smooth, dry, protected from theft and vandalism, and be located adjacent to the area being lined.

1.5.4. Handling - The INSTALLER shall handle all rolls in such a manner to ensure they are not damaged in any way and shall take any necessary precautions to prevent damage to underlying layers during placement of the drainage material.

1.6. WARRANTY

1.6.1. Material shall be warranted, on a pro-rata basis against defects for a period of 5-years from the date of the geocomposite installation.

1.6.2. Installation shall be warranted against defects in workmanship for a period of 1-year from the date of geocomposite completion.

2. PRODUCTS

2.1. MATERIALS

2.1.1. Acceptable Products

- GSE FabriNet – double-sided, nonwoven/nonwoven, 6 oz/yd^2
- Engineer approved alternative

2.1.2. Alternative Materials

- Prior to considering an alternative geocomposite material, the Contractor shall submit certified test results and statements of quality from the proposed geocomposite supplier to the engineer, indicating without exception that the proposed geocomposite meets the requirements of this specification. Submittals shall be delivered to the ENGINEER a minimum of five business days in advance of the bid.

2.2. GEOCOMPOSITE PROPERTIES

2.2.1. A geocomposite shall be manufactured by extruding two crossing strands to form a bi-planar drainage net structure with a non-woven geotextile bonded to both sides.

2.2.2. The geocomposite specified shall have properties that meet or exceed the values listed in Table 2.2A.

Table 2.2A: Geocomposite

TESTED PROPERTY	TEST METHOD	FREQUENCY	MINIMUM AVERAGE VALUE[1]		
Geocomposite			**6 oz/yd²**	**8 oz/yd²**	**10 oz/yd²**
Transmissivity[2], gal/min/ft (m^2/sec) Double-Sided Composite	ASTM D 4716	1/540,000 ft^2	0.48 (1×10^{-4})	0.48 (1×10^{-4})	0.43 (9×10^{-5})
Ply Adhesion, lb/in (g/cm)	ASTM D 7005	1/50,000 ft^2	1.0 (178)	1.0 (178)	1.0 (178)
Geonet Core[3]					
Transmissivity[2], gal/min/ft (m^2/sec)	ASTM D 4716		9.66 (2×10^{-3})	9.66 (2×10^{-3})	9.66 (2×10^{-3})
Density, g/cm^3	ASTM D 1505	1/50,000 ft^2	0.94	0.94	0.94
Tensile Strength (MD), lb/in (N/mm)	ASTM D 5035/7179	1/50,000 ft^2	45 (7.9)	45 (7.9)	45 (7.9)
Carbon Black Content, %	ASTM D 1603*/4218	1/50,000 ft^2	2.0	2.0	2.0
Geotextile[3,4]					
Mass per Unit Area, oz/yd^2(g/m^2)	ASTM D 5261	1/90,000 ft^2	6 (200)	8 (270)	10 (335)
Grab Tensile, lb (N)	ASTM D 4632	1/90,000 ft^2	160 (710)	220 (975)	260 (1,155)
Puncture Strength, lb (N)	ASTM D 4833	1/90,000 ft^2	90 (395)	120 (525)	165 (725)
AOS, US sieve (mm)	ASTM D 4751	1/540,000 ft^2	70 (0.212)	80 (0.180)	100 (0.150)
Permittivity, (sec^{-2})	ASTM D 4491	1/540,000 ft^2	1.5	1.3	1.0
Flow Rate, gpm/ft^2 (lpm/m^2)	ASTM D 4491	1/540,000 ft^2	110 (4,480)	95 (3,865)	75 (3,050)

UV Resistance, % retained	ASTM D 4355 (after 500 hours)	once per formulation	70	70	70
NOMINAL ROLL DIMENSIONS					
Geonet Core Thickness, mil (mm)	ASTM D 5199	1/50,000 ft^2	200 (5)	200 (5)	200 (5)
Roll Width[5], ft (m)			14.5 (4.4)	14.5 (4.4)	14.5 (4.4)
Roll Length[5], ft (m)	Double-Sided Composite		270 (82.3)	260 (79.2)	230 (70.1)
Roll Area, ft^2 (m^2)	Double-Sided Composite		3,915 (364)	3,770 (350)	3,335 (310)

NOTES:

- [1]AOS in mm is a maximum value.
- [2]Gradient of 0.1, normal load of 10,000 psf, water at 70°F between steel plates for 15 minutes. Contact manufacturer for performance transmissivity value for use in design.
- [3]Component properties prior to lamination.
- [4]Refer to geotextile product data sheet for additional specifications.
- [5]Roll widths and lengths have a tolerance of ±1%.
- *Modified.

2.2.3. Resin

- Resin shall be new first quality, compounded polyethylene resin
- Natural resin (without carbon black) shall meet the requirements of Table 2.2B.

Table 2.2B: Raw Material Properties

Property	Test Method	Value
Density (g/cm3)	ASTM D 1505	>0.94
Melt Flow Index (g/10 min)	ASTM D 1238	≤ 1.0

2.3. MANUFACTURING QUALITY CONTROL

2.3.1. The geocomposite shall be manufactured in accordance with the Manufacturer's Quality Control Plan submitted to and approved by the ENGINEER.

2.3.2. The geocomposite shall be tested according to the test methods and frequencies listed in Table 2.3.

Table 2.3: Manufacturing Quality Control Test Frequencies

Characteristics	Test Method	Units	Frequency
			Bi-Planar
Resin			
Polymer Density	ASTM D 1505	g/cm^3	Once Per Lot
Melt Flow Index	ASTM D 1238	g/10 min	Once Per Lot
Geonet Test			
Carbon Black	ASTM D 1603	%	1/50,000 ft^2
Tensile Strength, MD	ASTM D 5035	lb/ ft	1/50,000 ft^2
Density	ASTM D 1505	g/cm^3	1/50,000 ft^2
Geotextile Test			
Mass per Unit Area	ASTM D 5261	oz/yd^2	1/90,000 ft^2
Grab Tensile	ASTM D 4632	lb	1/90,000 ft^2
Puncture	ASTM D 4833	lb	1/90,000 ft^2
AOS, US Sieve	ASTM D 4751	mm	1/540,000 ft^2
Water Flow Rate	ASTM D 4491	gpm/ft^2	1/540,000 ft^2
UV Resistance	ASTM D 4355, (after 500 hours)	% retained	Once per resin formulation
Geocomposite Test			
Ply Adhesion	ASTM D7005	lb/in	1/50,000 ft^2
Transmissivity	ASTM D 4716	m^2/sec	1/540,000 ft^2

3. EXECUTION

3.1. FAMILIARIZATION

3.1.1. Inspection

- Prior to implementing any of the work in the Section to be lined, the INSTALLER shall carefully inspect the installed work of all other Sections and verify that all work is complete to the point where the installation of the Section may properly commence without adverse impact.
- If the INSTALLER has any concerns regarding the installed work of other Sections, he shall notify the ENGINEER.

3.2. MATERIAL PLACEMENT

3.2.1. The geocomposite roll should be installed in the direction of the slope and in the intended direction of flow unless otherwise specified by the ENGINEER.

3.2.2. If the project contains long, steep slopes, special care should be taken so that only full length rolls are used at the top of the slope.

3.2.3. In the presence of wind, all geocomposites shall be weighted down with sandbags or the equivalent. Such sandbags shall be used during placement and remain until replaced with cover material.

3.2.4. If the project includes an anchor trench at the top of the slopes, the geocomposite shall be properly anchored to resist sliding. Anchor trench compacting equipment shall not come into direct contact with the geocomposite.

3.2.5. In applying fill material, no equipment can drive directly across the geocomposite. The specified fill material shall be placed and spread utilizing vehicles with a low ground pressure.

3.2.6. The cover soil shall be placed on the geocomposite in a manner that prevents damage to the geocomposite. Placement of the cover soil shall proceed immediately following the placement and inspection of the geocomposite.

3.3. SEAMS AND OVERLAPS

3.3.1. Each component of the geocomposite will be secured or seamed to the like component at overlaps.

3.3.2. Geonet Components

- Adjacent edges of the geonet along the length of the geocomposite roll shall be placed with the edges of each geonet butted against each other.
- The overlaps shall be joined by tying the geonet structure with cable ties. These ties shall be spaced every 5 feet along the roll length.
- Adjoining geocomposite rolls (end to end) across the roll width should be shingled down in the direction of the slope, with the geonet portion of the top overlapping the geonet portion of the bottom geocomposite a minimum of 12 inches across the roll width.
- The geonet portion should be tied every 6 inches in the anchor trench or as specified by the ENGINEER.

3.4. REPAIR

3.4.1. Prior to covering the deployed geocomposite, each roll shall be inspected for damage resulting from construction.

3.4.2. Any rips, tears or damaged areas on the deployed geocomposite shall be removed and patched. The patch shall be secured to the original geonet by tying every 6 inches with the approved tying devices. If the area to be repaired is more than 50 percent of the width of the panel, the damaged area shall be cut out and the two portions of the geonet shall be cut out and the two portions of the geonet shall be joined in accordance with Subsection 3.3.

4. MEASUREMENT AND PAYMENT

4.1. Payment for geocomposite installation will be as per contract unit price per square foot, as measured parallel to liner surface, including designed anchor trench material and is based upon net lined area.

4.2. Net lined area is defined to be the true area of all surfaces to be lined plus designed burial in all anchor trenches, rubsheets, and sacrificial layers.

4.3. Prices shall include full compensation for furnishing all labor, material, tools, equipment, and incidentals.

4.4. Prices shall include all work involved in performing geocomposite installation completely as shown on the drawing, as specified herein, and as directed by the ENGINEER.

END OF SECTION