BEFORE THE OIL AND GAS CONSERVATION COMMISSION

OF THE STATE OF COLORADO

IN THE MATTER OF THE APPLICATION OF INVESTMENT EQUIPMENT, LLC FOR AN ORDER ESTABLISHING AN ENHANCED RECOVERY UNIT, AUTHORIZING ASSOCIATED ENHANCED RECOVERY OPERATIONS, AND REQUESTING AN AQUIFER EXEMPTION IN AND TO THE D SAND FORMATION OF CERTAIN DESCRIBED LANDS IN LOGAN COUNTY, COLORADO	CAUSE NO. DOCKET NO.

APPLICATION

COMES NOW, Investment Equipment, LLC ("Applicant") by and through its counsel Beatty & Wozniak, P.C., and submits its application to the Colorado Oil and Gas Conservation Commission ("Commission") requesting an order for approving an enhanced recovery unit for the purposes of enhanced recovery and unit operations of the D Sand Formation and for an aquifer exemption in certain portions of the Moose Field, Logan County, Colorado. In support of this application, the Applicant states as follows:

1. Applicant is a Colorado limited liability company, whose address is 17509 Road 14, Fort Morgan, Colorado 80701, is authorized to conduct business in Colorado, and is a registered operator with the Commission.

ENHANCED RECOVERY UNIT LANDS AND WELLS

2. Applicant submits this Application under C.R.S. §34-60-118 and Commission Rules 401.b and 503.b.3.

3. Applicant requests that the Commission issue an order approving an enhanced recovery unit for the purposes of enhanced recovery and unit operations of the D Sand Formation for the following lands:

Township 6 North, Range 52 West, 6th P.M.
Section 9: SE¼
Section 10: W½SE¼, SW¼NW¼, SW¼

420.0 acres, more or less, Logan County, Colorado
(the "Application Lands").

4. Applicant is a working interest owner in the D Sand Formation and operates three (3) active wells on Application Lands. The three (3) active wells are defined below:

a) Colorado 1-10 (API 05-075-09264)
SW¼SW¼, Section 10, Township 6 North, Range 52 West

b) Colorado 2-10 (API 05-075-09279)
NE¼SW¼, Section 10, Township 6 North, Range 52 West

c) Colorado 4-10 (API 05-075-09290)
NW¼SW¼, Section 10, Township 6 North, Range 52 West

5. Applicant is the owner of and/or operator for the mineral interests under the Application Lands.

6. Applicant is also the operator under an existing Communitization Agreement ("CA") affecting State Lands and Minerals and such CA includes the Application Lands. The CA covers the following lands:

Township 6 North, Range 52 West, 6th P.M.
Section 9: E½SE¼ (State Lease 8010.4)
Section 10: W½SE¼, SW¼NW¼, SW¼ (State Lease 91/8067-S)
Section 16: ALL (State Lease 8011.4)

Logan County, Colorado (the "Communitized Lands").

BACKGROUND, PLAN OF DEVELOMENT AND EXHIBITS

7. The Moose Field is a 1993 D Sand Formation Discovery. There are three (3) producing Moose Field wells on the Application Lands, as listed above, and two (2) are currently shut in due to lack of reservoir pressure. There are currently no D Sand Formation water injection wells in the Moose Field. Applicant's plan of development intends to convert the Colorado 2-10 producer, which is currently shut in, to a water injection well. The Colorado 4-10 and the Colorado 1-10 will remain producing wells from the D Sand Formation. Water that is currently pitted at the Moose Field will be re-injected into the D Sand Formation. The Commission has previously authorized the operation of all of the three (3) wells on a well by well basis and the Communitization Agreement was executed to effectuate the proper development of oil and gas resources.

8. The unitized formation is the subsurface portion of the Application Lands described as the stratigraphic equivalent of the D Sand formation, as the same is encountered between 4520' feet and 4550' feet as found in the State of Colorado 2-10, CO Api Colorado API 07509279, well located in the NE4SW4 of Section 10, Township 6 North, Range 52 West, Logan County, Colorado.

9. Pursuant to C.R.S. §34-60-118 and Commission Rules 401.b, Applicant hereby submits the following exhibits in support of this Application:

A. EXHIBIT A is a reference map identifying the Application Lands, and the status of existing wells both within and near the Application Lands. Exhibit A also shows the proposed injection well location (Colorado 2-10), and a one quarter mile radius around the subject injection well. Exhibit A is submitted pursuant to Rule 401.b.1. None of the wells penetrating the proposed injection zone within one quarter mile of each injection well require remedial action within the scope of Rule 401.b.1.

B. EXHIBIT B is a reference map and list identifying the owners of surface lands within one quarter mile of the proposed injection well.

C. EXHIBIT C is a reference map and list of the owners of working interests, royalty interests and overriding royalty interests within each proposed Allocation Unit within the Application Lands.

D. EXHIBIT D is a geological map representing the net thickness of the D Sand Formation underlying the Application lands.

E. EXHIBIT E is a geological map representing the structure below mean sea level of the D Sand Formation underlying the Application lands.

F. EXHIBIT F includes wellbore diagrams of the cased hole wells in the Application Lands, as required by Rule 401.b.4.D. Current bottom hole pressure is less than 20 psi, and anticipated injection pressures are less than 100 psi. A water analysis has been submitted and included in Exhibit G as per Rule 401.b.4.E. No compatibility issues between exiting water and injection water are anticipated since injection source water will be from the D Sand Formation. The Applicant does not propose a stimulation program within the meaning of Rule 401.b.4.F. The Applicant is the proposed operator of the enhanced recovery unit and those persons notified of this Application are described herein.

G. EXHIBIT G is an independent, third party description of the enhanced recovery operation for which authorization is requested as required by Rule 401.b.2; also independently verifying economic recovery of hydrocarbon provided enhanced recovery efforts that demonstrate the unitization effort will prevent waste, protect correlative rights and promote the efficient and effective drainage of oil, gas and associated hydrocarbons from the D Sand Formation underlying the Application Lands.

H. EXHIBIT H is a copy of the form of proposed unit agreement and is submitted pursuant to Rule 401.b.3.

I. EXHIBIT I is a copy of the form of proposed unit operating agreement and is submitted pursuant to Rule 401.b.3.

J. EXHIBIT J is a copy of the resistivity log from the State of Colorado 2-10, Colorado API 07509279, well and is submitted pursuant to Rule 401.b.(4)(C).

K. EXHIBIT K is an Affidavit of Mailing verifying that this Application was mailed to those parties listed on Exhibit 1 on or before May 18, 2012. The parties are D Sand Formation owners of record within the Application Lands, or such owners within one-quarter (¼) mile of the proposed injection/intake well or wells.

10. No later than seven days after the Application is filed, the Applicant shall submit to the Commission a certificate of service demonstrating that it has served a copy of this Application via United States mail, first class postage prepaid, on those persons not listed in Exhibit B or Exhibit C who nonetheless own an interest in the mineral estate within one half mile of the Application Lands to be unitized as required by Rules 503.e. and 507.b(3).

Request for Approval of Enhanced Recovery Unit

11. The water injected into the D Sand Formation in the Application Lands will help promote production from the presently producing D Sand Formation wells. Without water injection, it is uncertain whether the Moose Field will remain economic to produce. Injection is reasonably necessary to increase the ultimate recovery of oil, gas and associated hydrocarbons. Records available to the Applicant do not show the existence of any compatibility or other environmental issues with water as it concerns the D Sand Formation. For purposes of Rule 401.b.(4)(A), the Graneros Shale is the formation capable of limiting the movement of any fluids to be injected. For purposes of Rule 401.b.(4)(B), the Fox Hills aquifer, at a depth of 50' below surface, is the only underground drinking source that is subject to the proposed injection activity.

12. Recovery of oil exceeds the estimated additional cost incident to conducting such operations. The operation of the proposed enhanced recovery unit will help prevent waste, protect correlative rights and be conducted in a manner consistent with the protection of public health, safety, including the protection of the environment and wildlife resources. As a result, approval of this Application will help promote the statutory purposes of the Colorado Oil and Gas Conservation Act and, more specifically, § 34-60-118(3), Colo. Rev. Stat. (2011).

13. The forms of proposed unit agreement and unit operating agreement attached as Exhibits H and I include terms that are just and reasonable and fulfill the purposes and requirements outlined in § 34-60-118, Colo. Rev. Stat. (2011) and, more specifically, §.§ 34-60-118(4), Colo. Rev. Stat. (2011).

14. By the time of the July 9, 2012 hearing, the Applicant will have approved in writing, the formation of the proposed unit for greater than eighty percent of the working interest. The Applicant is currently undertaking steps to obtain the approval of the owners of at least eighty percent of the production or proceeds therefrom to be credited to interests that are free of costs, including royalties and overriding royalty interests. The Applicant proposes that the unit become effective upon the final approval of the Commission consistent with § 34-60-118(5), Colo. Rev. Stat. (2011).

15. Investment Equipment, LLC, the present operator of wells and other facilities associated with production within the Moose Field, shall be selected by the working interest owners to be the operator of the proposed enhanced recovery unit.

Request for Aquifer Exemption

16. Pursuant to Commission Rule 324B, Applicant requests the underground formation subject to this Application be designed an exempt aquifer as it does not now serve as a source of drinking water and is a hydrocarbon producing formation as evidenced by the water analysis submitted in Exhibit F and Exhibit G.

Conclusion and Request for Relief

In order to prevent waste, protect correlative rights and promote the efficient and effective drainage of oil, gas and associated hydrocarbons from the D Sand Formation underlying the Application Lands, the Commission should:

A. Approve this Application and issue an order approving the unitization for purposes of enhanced recovery and unit operations of the D Sand Formation for the Application Lands within the Moose Field in Logan County, Colorado;

B. Issue an aquifer exemption for the formation into which Applicant proposes injecting water for the purposes of enhanced recovery of hydrocarbons; and

C. Providing for such further findings and orders as the Commission may deem proper and advisable.

WHEREFORE, Applicant respectfully requests that this matter be set for hearing, that notice be given as required by law and that upon such hearing this Commission enter its order consistent with Applicant's proposals as set forth above.

Dated this 11th day of May, 2012.

Respectfully submitted,

INVESTMENT EQUIPMENT LLC

By: Jamie L. Jost

Jamie L. Jost
Matthew J. Lepore
Beatty & Wozniak, P.C.
Attorneys for Applicant
216 16th Street, Suite 1100
Denver, Colorado 80202

Applicant's Address:
Investment Equipment LLC
ATTN: Theodore Pagano
17509 Road 14
Fort Morgan, Colorado 80701

VERIFICATION

STATE OF COLORADO)
) ss.
CITY AND COUNTY OF DENVER)

Theodore Pagano, Engineering Consultant, Agent for Investment Equipment LLC, upon oath deposes and says that he has read the foregoing Application and that the statements contained therein are true to the best of his knowledge, information, and belief.

Theodore Pagano
Engineering Consultant and Agent to Investment Equipment LLC

Subscribed and sworn to before this 11th day of May, 2012.

Witness my hand and official seal.

My commission expires: 06/06/2015

Notary Public

[SEAL]

CYNTHIA SWAINSON
NOTARY PUBLIC
STATE OF COLORADO
My Commission Expires 06/06/2015

EXHIBIT 1
INTERESTED PARTIES

Investment Equipment LLC
17509 Road 14
Ft. Morgan, CO 80701

Set Five LLC
P.O. Box 9911
Denver, CO 80209

Arrowhead Minerals LLC
100 N. 27th St., Suite 320
Billings, MT 59101

Thomas Oil and Gas LLC
12167 S. Tallkid Court
Parker, CO 80138

Colorado Board of Land Commissioners
1127 Sherman St., Suite 300
Denver, CO 80203

Jane A. Shapiro
7387 E. Onyx Ct., Suite 401
Scottsdale, AZ 85258

Robert C. Nolan, Jr.
P.O. Box 2861
Tuscaloosa, AL 35403-2861

Peter Shapiro
4305 Darley Ave.
Boulder, CO 80305

Richard J. Shapiro
955 Front Range Rd.
Littleton, CO 80120

Robert L. Brown
13904 Wellsburg Court
Edmond, OK 73013

Sam Hemby
148 Private Road 8235
Kennedy, TX 77819

WES Lands
201 Thelma Drive, Suite 412
Casper, WY 82609

Yates Petroleum
730 17th St # 320
Denver, CO 80202

Kathy and Gene Miller
17333 Highway 6
Atwood, CO 80722

Brad Hofmeister
Logan County Assessor's Office
315 Main Street
Sterling, CO 80751

Kim Kaal
Energy Liaison
Colorado Division of Wildlife
711 Independent Ave.
Grand Junction, CO 81505

Kent Kuster
Colorado Department of
Public Health & Environment
4300 Cherry Creek Drive South
Denver, CO 80246-1530

BEFORE THE OIL AND GAS CONSERVATION COMMISSION

OF THE STATE OF COLORADO

IN THE MATTER OF THE APPLICATION OF INVESTMENT EQUIPMENT, LLC FOR AN ORDER ESTABLISHING AN ENHANCED RECOVERY UNIT, AUTHORIZING ASSOCIATED ENHANCED RECOVERY OPERATIONS, AND REQUESTING AN AQUIFER EXEMPTION IN AND TO THE D SAND FORMATION OF CERTAIN DESCRIBED LANDS IN LOGAN COUNTY, COLORADO	CAUSE NO. DOCKET NO.

AFFIDAVIT OF MAILING

STATE OF COLORADO)
)ss.
CITY AND COUNTY OF DENVER)

Jamie L. Jost of lawful age, and being first duly sworn upon her oath, states and declares:

That she is the attorney for Investment Equipment LLC, that on or before May 18, 2012, she caused a copy of the attached Application to be deposited in the United States Mail, postage prepaid, addressed to the parties listed on EXHIBIT 1 to the Application.

Jamie L. Jost

Subscribed and sworn to before me on May 11, 2012.

Witness my hand and official seal.

My commission expires: 10-04-13.

TERESA L. PETERSON NOTARY PUBLIC STATE OF COLORADO

Notary Public

Exhibit A: Application Lands, and the status of existing wells both within and near the Application Lands. Colorado 2-10, is the single proposed injection well, and a one quarter mile radius surrounding the proposed injector is graphically represented on the Exhibit.

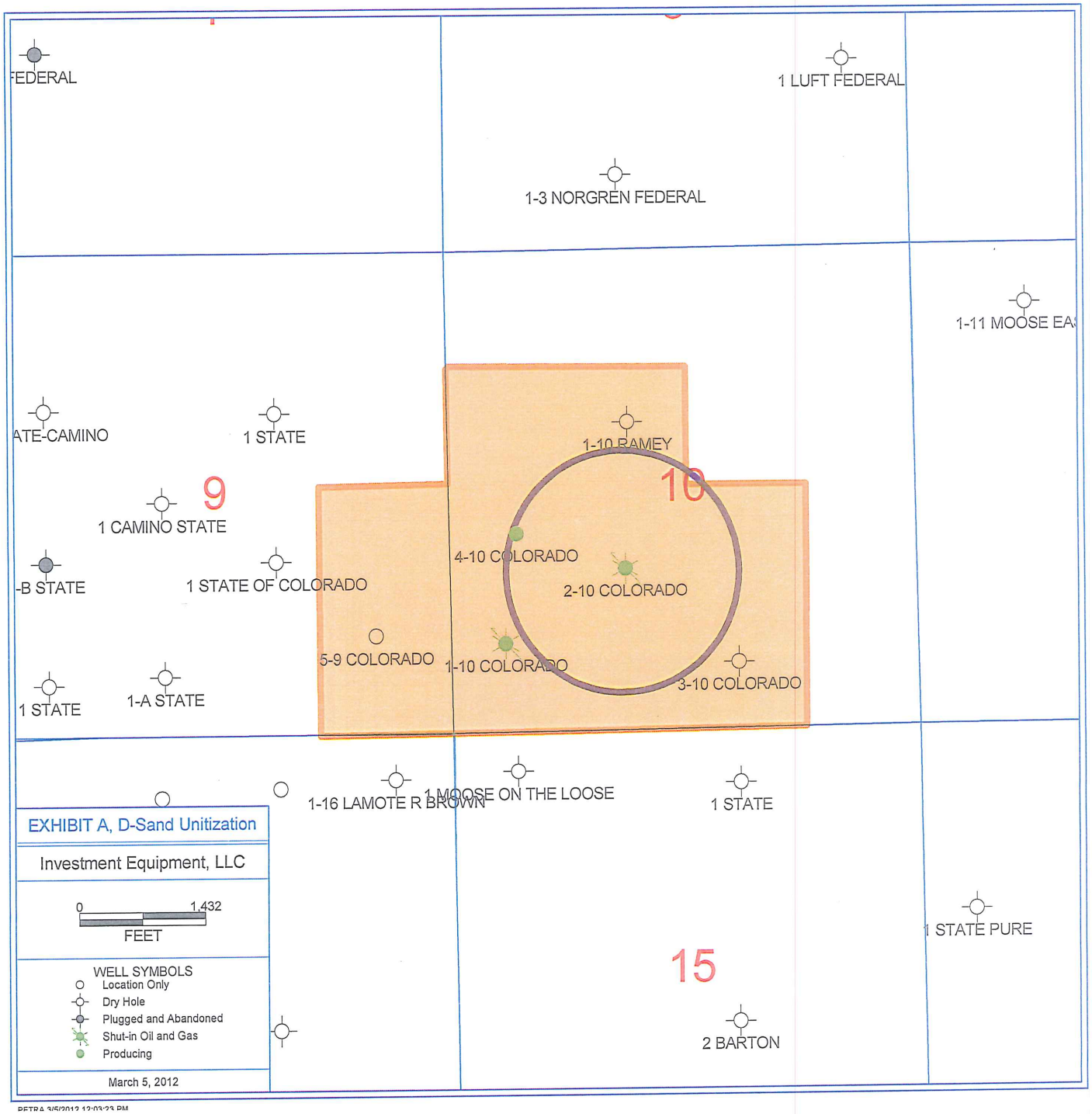

Exhibit B: Application Lands and Surface Ownership within ¼ mile radius of the proposed injection wellbore (Colorado 2-10).

Logan County Parcel ID:

999918250
The State of Colorado
999918300
The State of Colorado
38077710400810
Gene and Kathy L. Miller

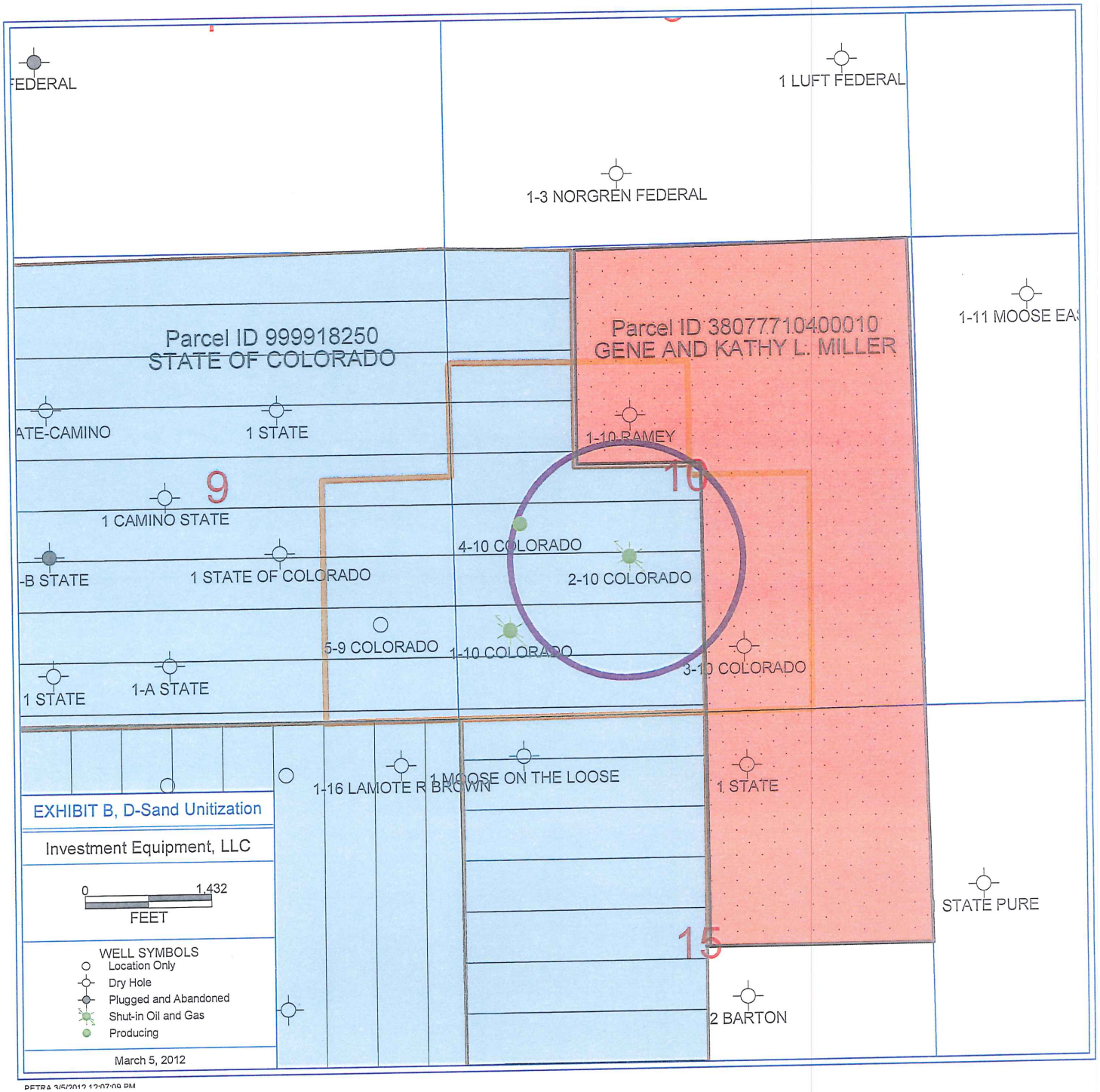

Exhibit C: Application Lands and Mineral Interests of Record in the subject lands

Tract 1 (480 Acres m/l)

State of Colorado
.125 RI
Investment Equipment, LLC
.4125 WI
Set Five, LLC
..078375 WI
Arrowhead Minerals, LLC
.251625 WI
Thomas Oil and Gas, LLC
.0825 WI
Jane A. Shapiro
.004875 OR
Robert C. Nolan, Jr.
.0075340900 OR
Peter Shapiro
.01425 OR
Richard J. Shapiro
.01425 OR
Robert L. Brown
.00909091 OR

TOTAL REPORTED TRACT 1
1.0

Tract 2 (40 Acres m/l)

Gene and Kathy L. Miller
.125 RI
Investment Equipment, LLC
.875 WI

TOTAL REPORTED TRACT 2
1.0

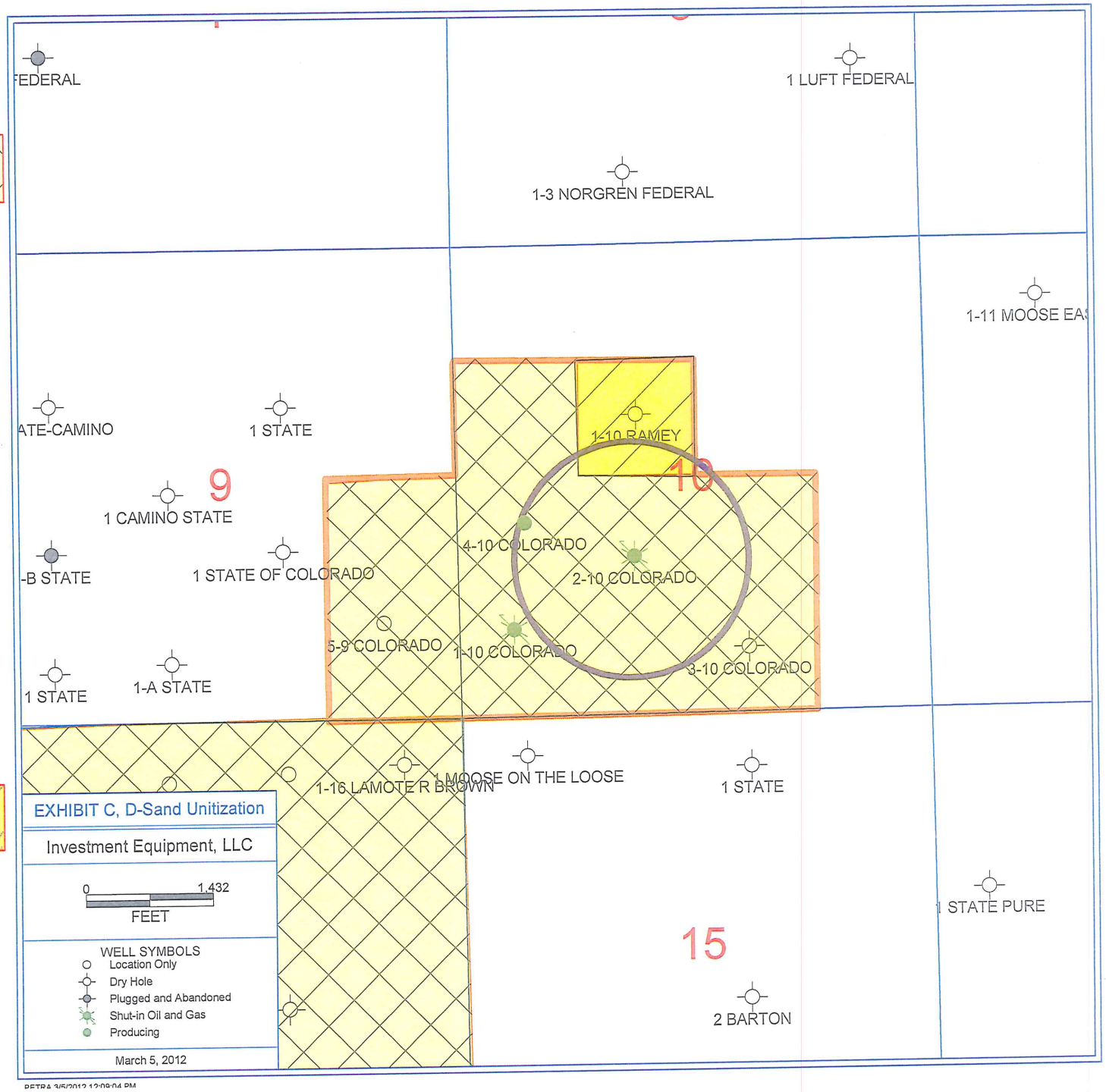

Exhibit D: Application Lands and Net Thickness of the existing producing horizon and propositioned injection horizon, the D Sand Formation; whereby probable Net Pay is > 5' D Sand Thickness (Green). Injection is proposed at the Colorado 2-10.

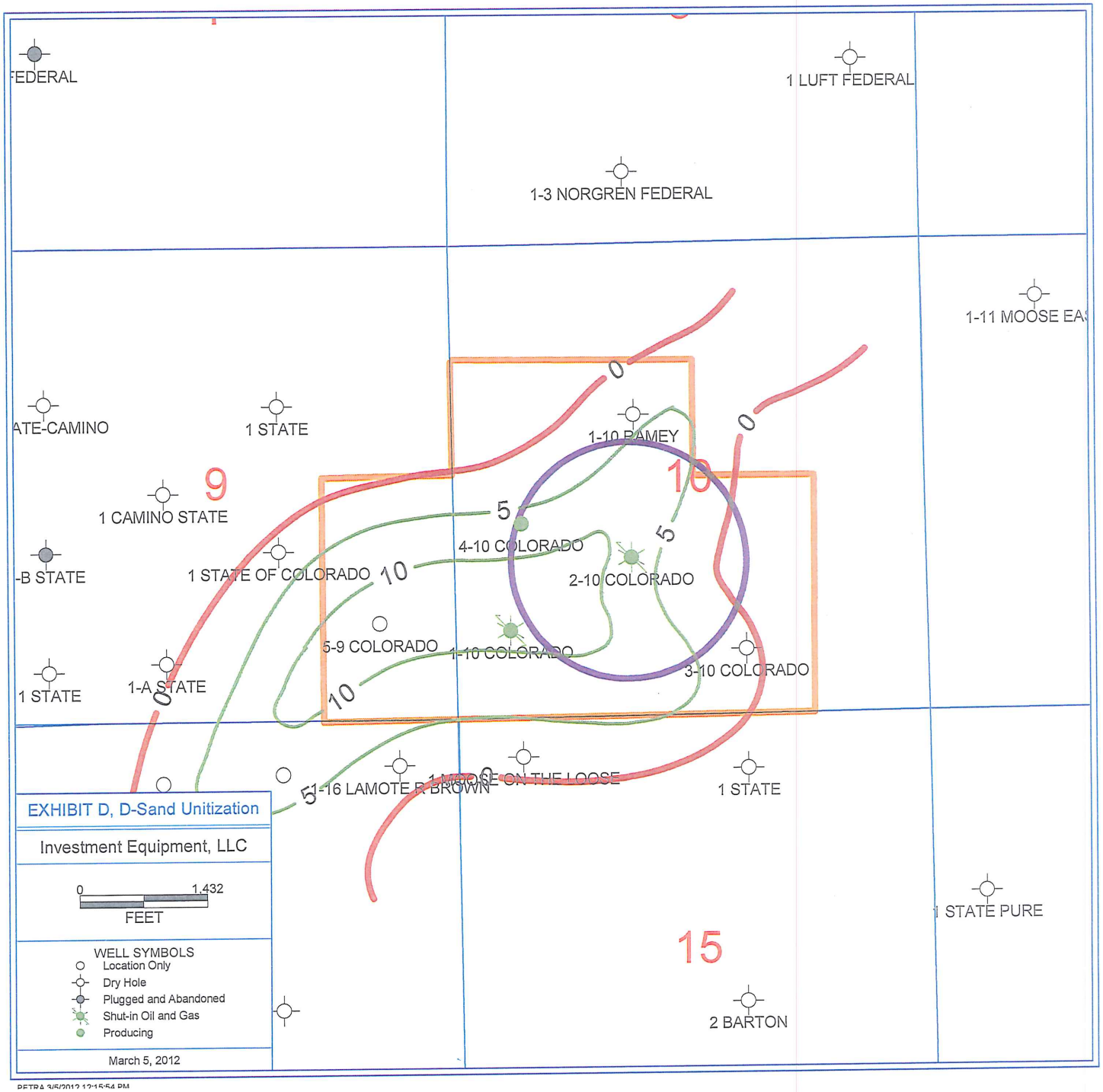

Exhibit E: Application Lands and Structure, depth subsea, of the existing producing horizon and propositioned injection horizon, the D Sand Formation. Injection is proposed at the Colorado 2-10.

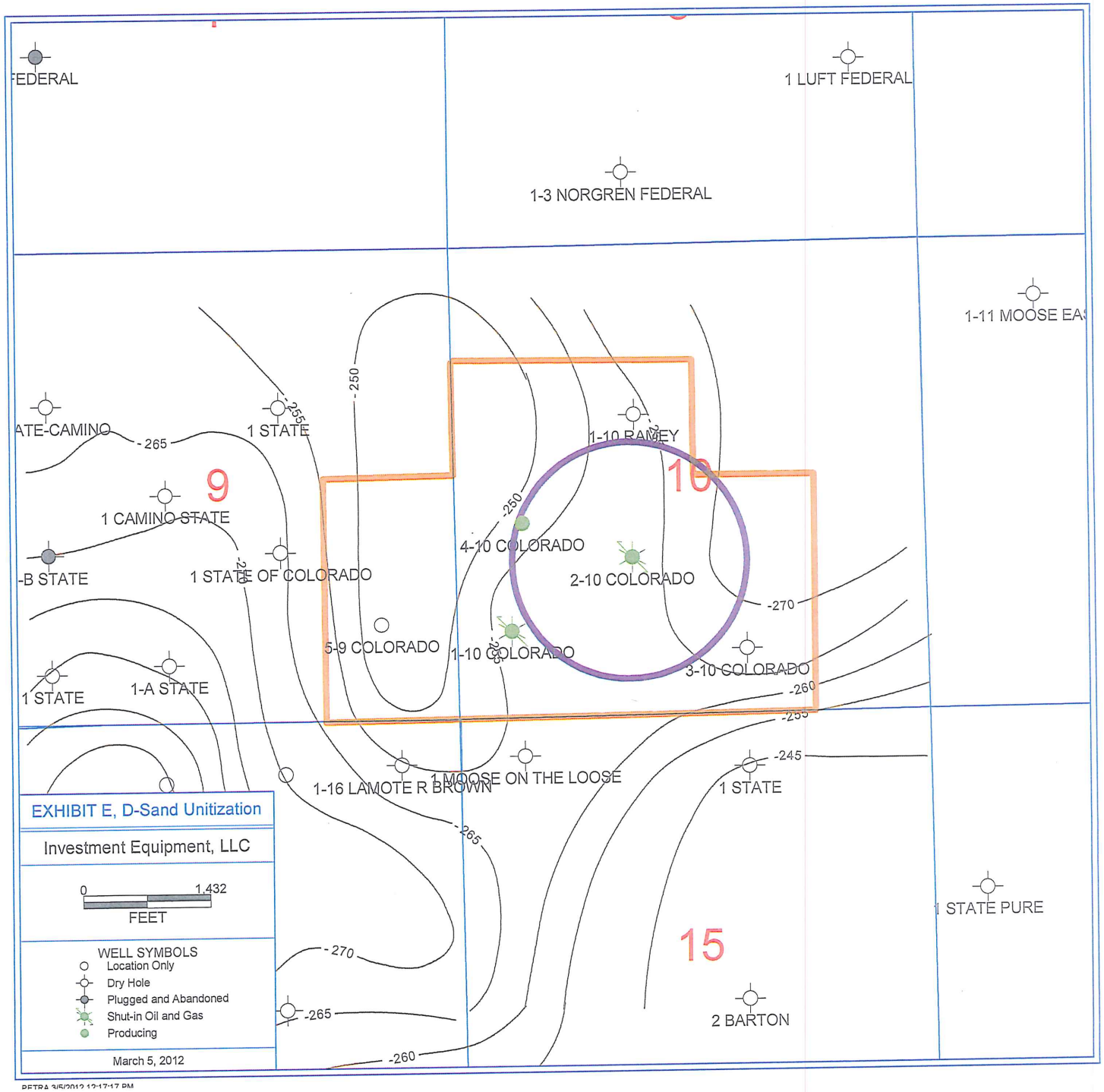

Exhibit F (1 of 4) :
Wellbore Diagram of the Proposed Injector (Colorado 2-10) under the Application Lands.

State 2-10

Sec 10 T6N R52W
LOGAN COUNTY CO

CURRENT WELLBORE DIAGRAM

API No. 05-075-09279
GL @ 4255'
KB @ 4266'
COMPLETION DATE:12/1993

UPDATED 2/2012 BY TAP

SURFACE CASING
8 5/8" 24# K-55
SET @ 159' KB
100 SX CMT
Cement to Surface
12 1/4" Hole

PROD. CASING
5 1/2" 14# J-55
SET @ ' 4635
CMT w/ 125 SX 50/50 POZ
TOC @ 3795' (CBL)
7 7/8" HOLE

PROD. TBG
2 7/8"
SET @ '4592
PKR @ '4451

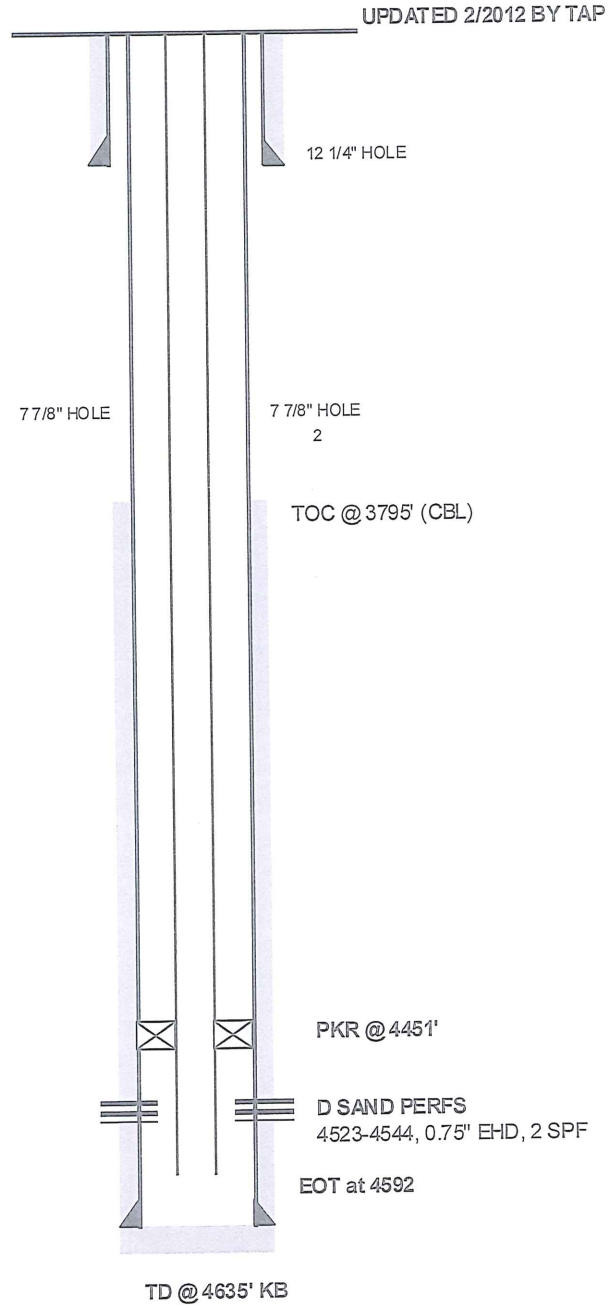

Exhibit F (2 of 4): Wellbore Diagram of one of the Proposed Producers (Colorado State 4-10) under the Application Lands.

State 4-10

Sec 10 T6N R52W
LOGAN COUNTY CO

CURRENT WELLBORE DIAGRAM

API No. 05-075-09290
GL @ 4240'
KB @ 4250'
COMPLETION DATE:12/1995

UPDATED 2/2012 BY TAP

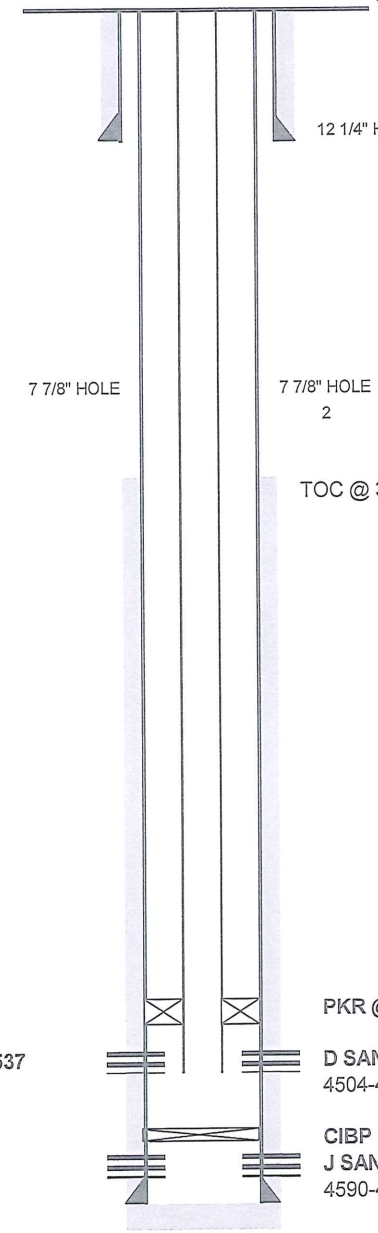

SURFACE CASING
8 5/8" 24# K-55
SET @ 178' KB
75 SX CMT
Cement to Surface
12 1/4" Hole

PROD. CASING
5 1/2" 14# J-55
SET @ ' 4644
CMT w/ 125 SX 50/50 POZ
TOC @ 3800' (CBL)
7 7/8" HOLE

PROD. TBG
2 7/8"
SET @ '4537
PKR @ '4410

Exhibit F (3 of 4): Wellbore Diagram of one of the Proposed Producers (Colorado 1-10) under the Application Lands.

Colorado 1-10

Sec 10 T6N R52W

LOGAN COUNTY CO

CURRENT WELLBORE DIAGRAM

API No. 05-075-09264
GL @ 4261'
KB @ 4271'
COMPLETION DATE:5/1993

UPDATED 2/2012 BY TAP

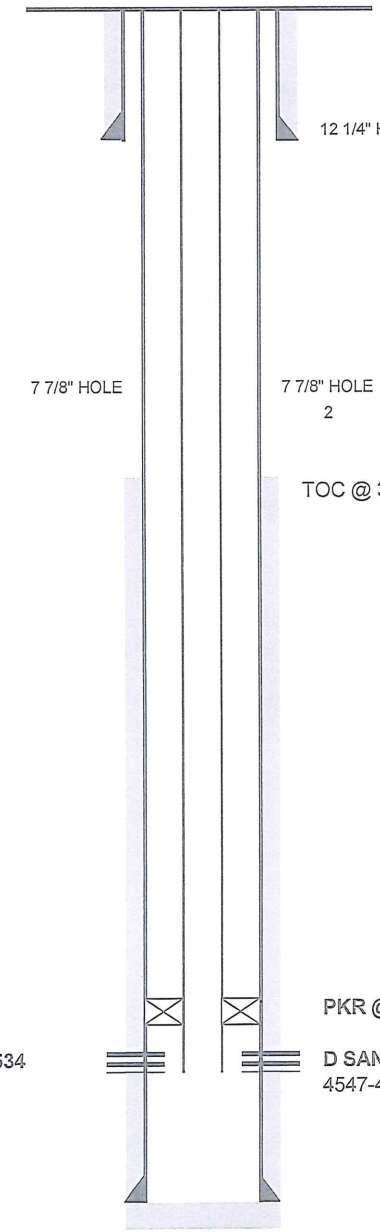

SURFACE CASING
8 5/8" 24# K-55
SET @ 173' KB
75 SX CMT
Cement to Surface
12 1/4" Hole

PROD. CASING
5 1/2" 14# J-55
SET @ ' 4580
CMT w/ 125 SX 50/50 POZ
TOC @ 3906' (CBL)
7 7/8" HOLE

PROD. TBG
2 7/8"
SET @ '4576
PKR @ '4534

Exhibit F (4 of 4): Wellbore Diagram of one of the Proposed Producers (Colorado 1-10) under the Application Lands.

Colorado 1-10

Sec 10 T6N R52W

LOGAN COUNTY CO

CURRENT WELLBORE DIAGRAM

API No. 05-075-09264

GL @ 4261'

KB @ 4271'

COMPLETION DATE:5/1993

UPDATED 2/2012 BY TAP

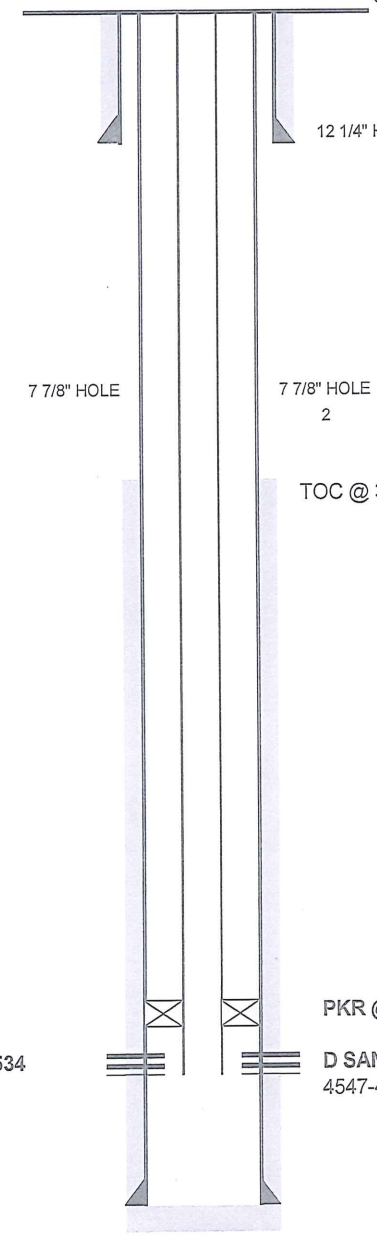

SURFACE CASING

8 5/8" 24# K-55

SET @ 173' KB

75 SX CMT

Cement to Surface

12 1/4" Hole

PROD. CASING

5 1/2" 14# J-55

SET @ ' 4580

CMT w/ 125 SX 50/50 POZ

TOC @ 3906' (CBL)

7 7/8" HOLE

PROD. TBG

2 7/8"

SET @ '4576

PKR @ '4534

Exhibit F (4 of 4): Water Analysis from the existing producing horizon and propositioned injection horizon, the D Sand Formation. No compatibility issues between exiting water and injection water are anticipated since injection source water will be from the D Sand Formation.

SERVICE FRACTURING COMPANY

P. O. BOX 1387 - PH. 303 867-3087 - FT. MORGAN, COLO. 80701

00706422

WATER ANALYSIS

COMPANY: Cyanostar

LEASE: Colorado

WELL: #1-10

DATE: 6-21-93

SAMPLE NUMBER:

DISSOLVED SOLIDS

CATIONS:

Sodium, Na (calc)	2,852
Calcium, Ca	68
Magnesium, Mg (calc)	68
Potassium, K	12

Anions:

Chloride, CL	4,300
Sulfate SO_4	49
Bicarbonates, HCO_3	671

Total Dissolved Solids (calc) Derived from Specific Gravity	6,200
Iron, Fe (total)	none
Sulfide, as H_2S	N/T

OTHER PROPERTIES

ph	7.5
75°F Specific Gravity	1.004
75°F Resistivity meter	.710
Total Hardness	136

Well Data:

Depth	
Formation	
Water B/D	

Remarks & Recommendations:

Analyst: Alan L. DuBois

EXHIBIT G

MOOSE FIELD STUDY

PRIMARY & SECONDARY RESERVE POTENTIAL

EFFECTIVE
JUNE 1, 2006

Prepared by
Walter C. Pearson, Jr.
Professional Engineer

10745 W 36th Avenue
Wheat Ridge, CO 80033

WALTER C. PEARSON Jr.
PROFESSIONAL ENGINEER
(303) 291-1255
10745 W 36th Ave.
Wheat Ridge, CO 80033

February 13, 2006

Mr. James C. Woods
P.O. Box 38207
Colorado Springs, CO 80937

RE: Moose Field Study

Mr. Woods:

Pursuant to your request I have completed a study of the potential for additional drilling in and the secondary potential of the Moose Field in sections 9, 10, 15 and 16 T6N-R52W Logan County, Colorado. This field was discovered in 1993 with initial production in June 1993. It is currently developed with three (3) wells of which two (2) are still actively producing. The field wells produce from the Cretaceous D Sand which is geologically interpreted to be a meandering channel sand with water legs on either end of the oil accumulation. Cumulative production to December 1, 2005, is reported to be 141,042 STB of oil and 115,668 barrels of water. No gas production has been reported to the state.

Based on the provided geological interpretation a reservoir volume of 1,783 acre-feet has been determined through planimetering the gross pay isopach map adjusted to a net pay isopach map using the identified water-oil contact at a sub sea elevation of -290 feet on the base of the D Sand. As will be discussed later this results in an original oil in place (OOIP) of approximately 1,682,000 STB and 0.42 BCF of gas. The field covers a surface area of approximately 327 acres.

This cumulative recovery represents only 8.4% of the OOIP. Based on these recoveries and the geological interpretation it appears reasonable that three (3) additional locations would be necessary to fully develop the field. The wells proposed and their projected economic results are;

New Well Location	Gross Oil (STB)	Net Oil (STB)	Capital Investment ($)	Projected Cash Flow Undisc. ($)	Disc. @ 10% ($)
NE SE Section 9	50,000	41,250	400,000	1,362,647	716,764
SE SE Section 9	50,000	41,250	400,000	1,362,647	705,468
SE SW Section 10	25,000	20,625	400,000	413,823	160,979
Total	125,000	103,125	1,200,000	3,139,117	1,583,211

The drilling of these three(3) wells increases the Estimated Ultimate Recover (EUR) under primary to approximately 283,000 STB or 17% OOIP. This is felt reasonable for an under pressured and possibly limited water drive reservoir like the Moose Field.

Beyond the remaining primary of the two (2) producing wells and the primary potential of the three(3) proposed development locations there is an indicated secondary potential of approximately 85,000 STB or 5% of OOIP. The basis for the estimate will be detailed later in the report. The value of the potential secondary was estimated by the difference between the summation economics of remaining primary, existing and new drilling, and the summation economics of remaining primary and potential secondary reserves. The results are;

Reserve Type	Gross Oil (STB)	Net Oil (STB)	Capital Investment ($)	Projected Cash Flow Undisc. ($)	Disc. @ 10% ($)
Primary & Secondary	225,747	186,241	2,000,000	5,636,214	2,762,344
Primary	140,760	116,127	1,200,000	3,497,755	1,838,080
Secondary	84,987	70,114	800,000	2,138,459	924,264

The indicated total field EUR would then be approximately 368,000 STB or 22% OOIP.

Attached following the body of this report are the Production Curves and the economics for the current wells, the individual proposed new wells, the summated primary wells and the summated primary wells plus secondary reserves. The parameters used in these economic projections are defined later in this report.

Source of Data

Lease names, locations, completion data and performance histories were provided by you or were obtained from public sources for use in this evaluation. Working and Net Revenue Interests (WI and NRI) were supplied by you. The current oil price and effective severance and ad valorem tax rates were estimated by me based on your input and the current oil market in the area. Lease operating expenses were estimated from previous work and evaluations in these same areas, fields and formations . This data is consistent with my experience and knowledge of these areas, fields and formations and was accepted by me as presented. I reserve the right to revise the associated reserve and economic projections if future information indicates discrepancies in the data provided.

Reserve Categories

The reserves included in this report are classified in the Proved Developed Producing (PDP), Proved Undeveloped (PUD) and Probable categories. Proved oil and gas reserves are the estimated quantities of crude oil, natural gas, and natural gas liquids which geological and engineering data demonstrate with reasonable certainty to be recoverable in future years from known oil and gas reservoirs under existing economic and operating conditions. Proved Developed Producing (PDP) reserves are those which are expected to be produced from existing completion intervals now open for production in existing wells.

Proved Undeveloped (PUD) oil and gas reserves are reserves that are expected to be recovered from new wells on undrilled acreage, or from existing wells where a relatively major expenditure is required for recompletion. Reserves on undrilled acreage shall be limited to those drilling units offsetting production units that are reasonably certain of production when drilled.

Probable reserves are those unproved reserves which analysis of geological and engineering data suggests are more likely than not to be commercially recoverable.

Method of Assigning Reserves

Reserves were determined through the application of industry accepted evaluation methods. Where sufficient production history was available, remaining reserves were estimated from an extrapolation of past performance For wells having little or no production history, reserves were estimated from analogy with offset producing wells with sufficient producing history and using a simplified material balance.

Secondary potential was estimated through analogy with area D Sand fields in the mature stage of secondary recovery through water flooding. A review was made of all D Sand floods in Logan, Washington and Morgan Counties of Colorado. I then isolated on several closest to the Moose Field to define the secondary recovery to primary recovery ratio. I found;

Field	Location	Ratio
Luft Unit	T8N-R53W	0.33
Graylin Unit	T8N-R53W	0.27
Atwood East Unit	T7N-R52W	0.36
Nugget Unit	T1S-R50W	0.19
Akron East Unit	T3N-R52W	0.23

Further isolating on those fields felt to be most correlative to the Moose Field (Luft, Gravlin and Atwood East) indicates a secondary potential in the range of 0.30 STB of secondary reserves for every one STB of primary recovery. This would be in line for an under pressured, under gas saturated reservoir connected to a possible limited water reservoir.

Interest Factors

Interest factors, Working and Net Revenue Interest (WI and NRI), that were utilized in this work were provided by you. The interest factors used in this evaluation for of all wells was;

Working Interest	100.00%
Net Revenue Interest	82.50%

Oil Prices

The oil prices used were based your input and the current oil market for the area. An oil price of $10.00/STB off WTI of $65.00/STB or $55.00/STB was used and was held constant for the economic life of the properties.

Severance and Ad Valorem Taxes

The economics projections were adjusted for severance and ad avlorem taxes which are deducted from income in the economic projections. The severance and conservation tax rate utilized in the economic projections was 3%. An ad valorem tax rate of 6% was also used.

OperatingExpenses

Operating costs for the various entities for which economics were projected were;

Existing Wells under primary	$ 900.00/month/well
New Drilling Wells under primary	$1,000.00/month/well

These operating costs were held constant for the life of the wells.

Operating costs under secondary operations were estimated as:

Existing Wells under secondary	$1,200.00/month/well
New Drilling Wells under secondary	$1,200.00/month/well
Injection Wells - two wells	$1,000.00/month/well
Injection Plant	$1,000.00/month

Operating costs for the secondary economic projections were at a maximum starting in June 2007 when the flood is projected to initiate. The operating costs were reduced over time to reflect wells watering out and taken off active status and reductions in inection volumes required over time. These reduction are projected to occur in June 2015 and June 2020.

The schedule of operating costs for the "Primary & Secondary" economic case was;

Starting Date	Ending Date	Operating Cost
June 2006	September 2006	$1,800/month
September 2006	November 2006	$2,800/month
November 2006	January 2007	$3,800/month
January 2007	June 2007	$4,800/month
June 2007	June 2015	$9,000/month
June 2015	June 2020	$6,000/month
June 2020	depletion	$4,000/month

Planimetering

A geological interpretation for the Moose Field was provided by you in the format of a "gross pay" isopach map and a "structure" map on the top of the D Sand. This was refined to a "net pay" isopach map by reflecting the oil-water contact, -290' sub sea elevation, on the "gross pay" isopach map. This refined "net pay" isopach map was then planimetered and the following reservoir volumes were computed;

Area	Volume
SE Sections 9 & N/2 NE NE Section 16	629 acre-feet
W/2 SW Section 10 & N/2 NW NW Section 15	939 acre-feet
E/2 SW Section 10 & N/2 NE NW Section 15	218 acre-feet
Total Moose Field	1,786 acre-feet

Open Hole Log Analysis and Volumetric Estimates

I reviewed the log analysis in the Linton report and then did my own analysis to verify the basic parameters of porosity, 19% average, and water saturation of 25% average. These were used in the material balance and volumetric calculations.

An oil formation volume factor of 1.1743 RBBL/STB was defined. This was based on the reservoir parameters of bottom hole temperature, bottom hole pressure, oil gravity and estimated solution gas-oil ratio at initial reservoir conditions. These are defined in the following section "Material Balance Work".

Using the above it was estimated that the OOIP on an acre-foot basis was 942 STB/acre-foot. This then results in the estimated OOIP being approximately 1,682,000 STB (rounded) The above planimetered reservoir volumes then equate to the following OOIP for the areas planimetered:

Area	Volume	OOIP
SE Sections 9 & N/2 NE NE Section 16	629 acre-feet	592,400 STB
W/2 SW Section 10 & N/2 NW NW Section 15	939 acre-feet	884,300 STB
E/2 SW Section 10 & N/2 NE NW Section 15	218 acre-feet	205,300 STB
Total Moose Field	1,786 acre-feet	1,682,000 STB

Material Balance Work

A material balance model was used as a verifying tool. This is a simple model which uses the inputs of the acre-feet defined below and parameters from the Linton report, the DST, Colorado Oil & Gas Conservation Commission records and commercial records. The key input parameters were:

Parameter	Value
Reservoir Volume	1,783 acre-feet
Porosity	19%
Water Saturation	25%
Initial gas-oi-ratio	250 scf/STB
Gas Gravity	0.65
Initial Reservoir Pressure	1,126 psi
Bottom Hole Temperature	126 F
API Gravity of Oil	37.4
Recovery Oil	141,042 STB
Recovery Water	115,668 BBL

The model is balanced varying the reservoir pressure to the recovery point and the Cumulative GOR to achieve agreement in the calculated versus input "Initial Solution Gas-Oil-Ratio. The model indicated the following to be reasonable values for this D Sand reservoir;

Parameter	Value	
OOIP	1,681,773 STB	
OOIP/acre-foot	941.5 STB/acre-foot	
Gas in Place	420,430 mcf in solution initially	
Water in Place	658,260 RBBL	
Remaining Oil in Place	1,540,674 STB	65% reservoir volume
Remaining Gas in Place	248,546 mcf solution and free gas	
Remaining Free Gas	102,114 mcf	14% reservoir volume
Remaining Solution gas	146,432 mcf	
Remaining Water in Place	542,592 RBBL	21% reservoir volume

Many parameters affecting the results of material balance calculations are not known with precision and the results must be taken with some reservations. However, the input parameters are felt reasonable and the combination of the 700 psi bottom hole pressure and the 1,219 cumulative GOR are thought to be in line with expectations. The results appear to agree reasonably with the volumetric and decline analysis work

Assigned Reserves and Categories

The three (3) producers sold and reported on a commingled basis 104,838 STB from initial production to January 1, 1999. Subsequently the producers were reported separately a total of 36,20493 STB. This totals to 141,042 STB cumulative to December 1, 2005. This reporting method does not allow for the accurate identification of individual well performance and cumulatives. However, based on my analysis I am estimating the following as individual well cumulatives;

Colorado 1-10	54,521 STB
Colorado 2-10	54,521 STB
Colorado 4-10	32,000 STB
Total	141,042 STB

This represents approximately only 8.4% OOIP. Based on drainage calculations these wells have developed an estimated 140 acres of the field which is defined by the provided geology to be an estimated 327 acres in areal extent. Referring to the geological map attached following the economics, there are three (3) additional potential locations required to fully develop the field area and defined reservoir. These locations would be:

NE SE Section 9	*$400,000 capital cost to drill
SE SE Section 9	*$400,000 capital cost to drill
SE SW Section 10	*$400,000 capital cost to drill

* Estimate provided by you

The reserves attributed to these locations were based on the planimetering of a modification of the gross pay isopach map you provided. This required that I make adjustments for the water contact indicated to be at a sub sea elevation of -290 feet. The results defined a total reservoir volume of 1,783 ac-ft of net reservoir. The undeveloped areas of the reservoir were also planimetered to define the extent of undeveloped volumes. The two (2) new locations in Section 9 are indicated to have an attributable volume of 630 acre-feet. The one (1) new location in Section 10 is indicated to have 120 acre-feet.

Combining the above it was estimated that the potential new locations would develop Proved Undeveloped (PUD) reserves as follows:

NE SE Section 9	315 acre-feet	50,000 STB
SE SE Section 9	315 acre-feet	50,000 STB
SE SW Section 10	120 acre-feet	25,000 STB
		125,000 STB

It is anticipated that these new wells will encounter a partially depleted reservoir based on the material balance work. A bottom hole pressure in the range of 600 to 700 psi is expected. It is also expected that the free gas saturation will be just under 15% of the reservoir volume. This is critical to water flood potential as free gas saturations above 17-20% can result in water channeling through the gas saturated reservoir and premature watering out of producing wells.

Secondary Recovery Potential

The secondary potential was estimated based on the secondary-to-primary ratio defined above in the section "Method of Assigning Reserves" (Page 3). The basis for this approach is defined

in that section above and is an accepted method for cursory estimates of secondary recovery reserves. The ratio used in this work is 0.30 STB secondary reserves per STB ultimate primary reserves. This ratio is below the average for all water floods but in line for a water flood in a D Sand reservoir in Logan County, Colorado.

The lower ratio is attributed to the D Sand being an under pressured and under gas saturated reservoir connected to undefined water column(s). The Moose Field D Sand reservoir has two (2) water legs of undefined extent and volume and potential undefined hydrocarbon reservoirs beyond the water legs. This situation will require the pressurization of the entire reservoir, including the water legs, to realize the desired efficient sweep of the oil column.

The EUR under primary recovery is estimated to be 283,000 STB, 158,000 STB attributed to current wells and 125,000 STB attributed to the three (3) new locations. The anticipated secondary potential would then be 85,000 STB (rounded). These reserves could be classified as Probable reserves. The production curve for the "Primary & Secondary" potential defines the scheduling of these reserves with time.

The effective date of the economic runs is June 1, 2006. The new locations are scheduled to be drilled and come on sales as;

Location	Acre-Feet	Reserves	Date of First Production
NE SE Section 9	315 acre-feet	50,000 STB	September 1, 2006
SE SE Section 9	315 acre-feet	50,000 STB	November 1, 2006
SE SW Section 10	120 acre-feet	25,000 STB	January 1, 2007
		125,000 STB	

The projection anticipates Unitization hearings to be held in March or April 2007 with first injection realized in June 2007. The anticipated time to 2/3'rds fill up of reservoir voidage (oil, gas and water) is approximately 16 months. This is based on total reservoir voidage of 283,000 RBBL and injection volumes of 12,000 RBBL per month into two (2) injection service wells. Theoretical total fill up is estimated at 24 months.

The life of the water flood is projected to be about 22 years from first injection in mid 2007. The remaining life of the existing two (2) producing wells is 13 years from effective date. The remaining life of the three (3) proposed new locations is projected at 23 years. The unitization for water flooding would then both increase reserves and still recover the remaining primary reserves in the same effective time period.

A note of caution should be made with respect to the risks associated with water flooding efforts in a oil accumulation such as this. Beyond the normal acceptable risks of water flooding there are two (2) additional risks to respect. The first is the estimated free gas saturation level of near 15%. While not at the critical level as yet on a total reservoir basis, the free gas saturation near the producing well bores will most probably be well the critical range for potential channeling of water. This does not preclude using a previous producer as an injector but does indicate the prudence of injecting below the oil-water contact if possible and/or closely monitoring flood performance.

The second risk of note would be the water legs of undefined limits. Floods with this geometric situation require water to both pressurize the oil column and the water columns. This generally results in lower effectiveness of the injected water volumes. As before, this does not preclude realizing an economic water flood. It can require more time and more injected water to realize the recovery of the projected secondary reserves.

The two (2) wells proposed for injection service are the:

Colorado #2	NE SW Section 10	Top of cement 3,795' - 5 ½" casing
Occidental State 1	NW NE Section 16	P&A 1964 - 201' 8 5/8" - 150 sacks cement

The Colorado #2 well is problematic from both the lack of cement over the interval 3,795' to surface and the potential for high free gas saturation in the reservoir volume drained by the well. The cement coverage can be overcome by running the largest casing the 5 ½" 14# existing casing will allow and cementing to surface. It seems that 4 ½" casing could be used for this well. A casing inspection log would be required to ensure what size and weight of casing would work. The new casing should meet the Colorado Oil and Gas Conservation Commissions requirements to protect surface water bearing formations and allow the isolation of the injection into the D Sand.

The second concern is the free gas saturation around the Colorado #2 well. This well has been shut in since early 2004 with only two (2) months, June and July 2005, of testing since. While this is a relative small shut in time period to allow for the reservoir to come back to equilibrium, it may have reduced the potential for water channeling in the vicinity of the well bore. The open hole logs define no gross pay below the oil column present in this well bore. Therefore, injected water volumes will be placed in the oil column and into the free gas reservoir. Initial injection into the well and response of the offset Colorado #1 and #2 wells should be monitored closely.

The Occidental State #1 well was drilled in February 1964 and plugged the same month. It has 201' of 8 5/8" casing cemented with 150 sacks of cement. The hole is filled with heavy mud, 15 sacks of cement was placed at the bottom of the surface pipe (201') and another 10 sacks of cement was placed at the top of the surface pipe. Reentry of this well bore should not be a problem. The surface pipe size will not limit the injection service casing to be run. The casing will need to be cemented back to surface. The D Sand is reported to be at a sub sea elevation of -291' or 1' below the oil-water contact. Injected water will be placed in the aquifer as desired.

Water supply is anticipated to come from shallower non potable water sands per your input. The capital cost to develop the water supply was represented as being included in the $800,000 for the water flood. Water supply was not pursued beyond this as shallow sands have provided sufficient water for all other area floods.

Production Curves and Economics

Following the body of this letter report are presented the production curves and economics for;

Remaining primary Colorado #1 and #4 wells
Remaining primary for the three (3) proposed locations individually
Summation of remaining primary
Summation of primary and secondary reserves

The input parameters used in the economics have been documented above. The results project the following for the new locations and the total, "Primary & Secondary", potential;

	Rate of Return	Return on Investment	Payout Months
Individual new locations	>100%	4.41	12 months
Total Project	57.6%	3.82	30 months

Summary

The accuracy of any reserve estimate, especially when based on limited production history, is a function of available data and of engineering and geological interpretation and judgement. While the reserve estimates used herein are believed reasonable, they should be accepted with the understanding that subsequent reservoir performance, changes in pricing structure, or market demand may justify their revision. Reserve estimates based on analogy and assigned to undrilled acreage are inherently less reliable than those based on lengthy history.

I make no representation or warranty as to the ownership or title of the properties described herein, nor represent or warrant the economic viability of any oil and gas development conducted thereon. In my opinion, the above reserve estimates fairly and approximately present the proved oil and gas reserves attributable to your working interest in the properties defined above with respect to the definitions, assumptions, and methodology described herein.

I hope this answers your current questions. Please let me know if additional is desired and how you want me to proceed. I appreciate the opportunity to provide you with this evaluation. All related data is in my office and is available for your review.

Yours very truly,

Walter C. Pearson, Jr

Rate/Time Graph

Project: C:\Program Files\IHS Energy\PowerTools v7.0\Projects 7.0a\JC Woods\PRIMARY-2.mdb

Date: 2/14/2006
Time: 5:05 PM

Lease Name: PRIMARY & SECONDARY ()
County, ST: LOGAN, CO
Location: 10 6N 52W NW SW SW

Operator: P & M
Field Name: MOOSE

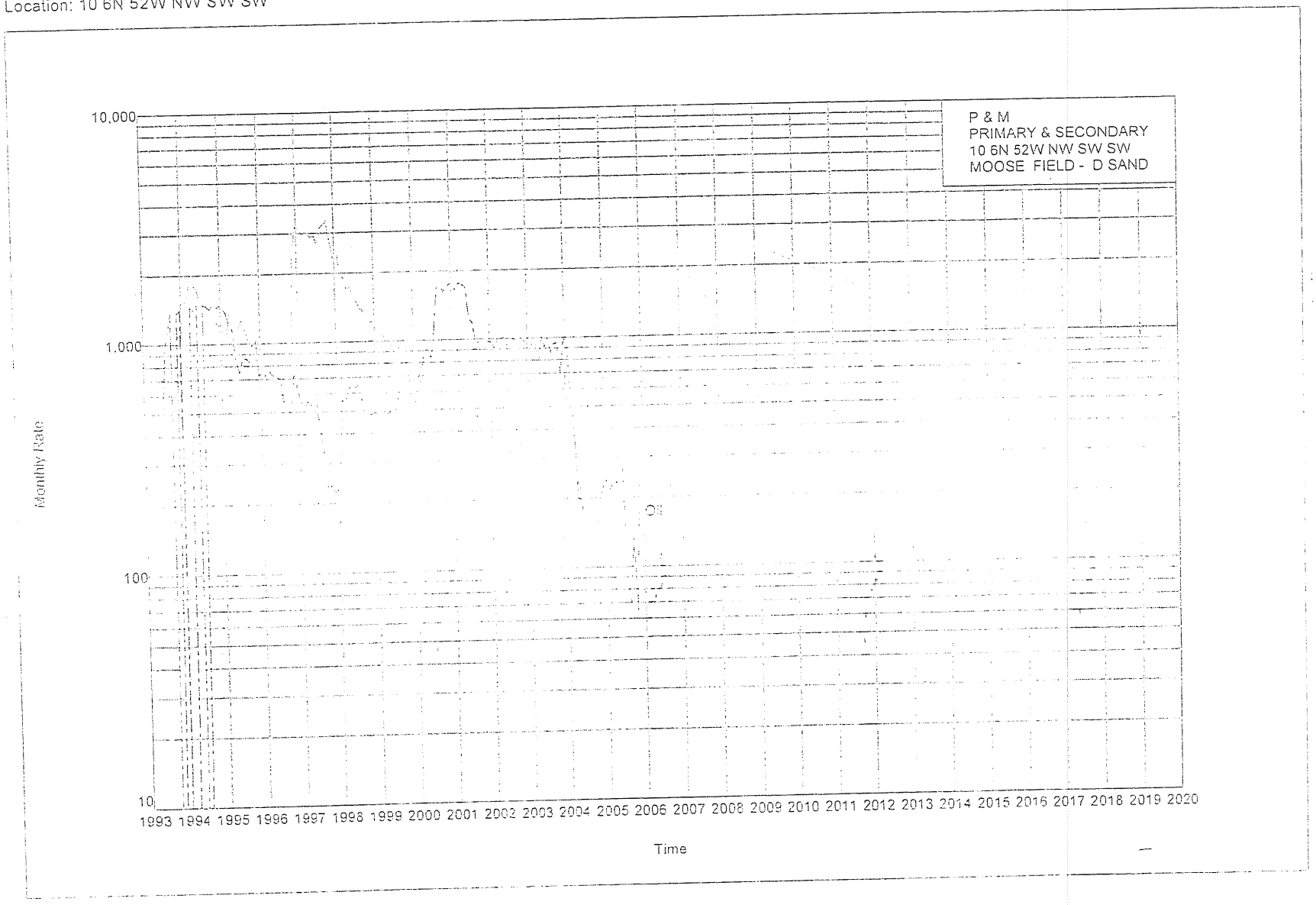

EXHIBIT H

UNIT AGREEMENT
PLAN OF UNITIZATION
Moose Field Unit
Logan County, Colorado

THIS AGREEMENT is entered into as of the ___ day of May, 2012, by the parties who have signed the original of this instrument, a counterpart thereof, or other instrument agreeing to become a party hereto.

WITNESSETH:

WHEREAS, in the interest of the public welfare and to promote conservation and increase the ultimate recovery of Unitized Substances from the Moose Field Unit area, situated in Logan County, Colorado, and to protect the rights of the owners of the interests therein, it is deemed necessary and desirable to enter into this Agreement to unitize the Oil and Gas Rights in and to the Unitized Formation in order to conduct Unit Operations as herein provided.

NOW, THEREFORE, in consideration of the premises and of the mutual agreements herein contained, it is agreed as follows:

ARTICLE 1
DEFINITIONS

As used in this Agreement:

1.1 **Unit Area** is the land described by those Tracts in Exhibit "A" and further depicted in Exhibit "B" as to which this Agreement becomes effective, or to which it may be extended as herein provided.

1.2 **Unitized Formation** is the subsurface portion of the Unit Area described as the stratigraphic equivalent of the D-Sand formations as the same is encountered between _____ feet and _____ feet, inclusive, below the surface (KB) in the _____ well located in the _____ of Section ___, Township _____, Range _____, Logan County, Colorado.

1.3 **Unitized Substances** are all oil, gas, gaseous substances, sulphur contained in gas, condensate, distillate, and all associated and constituent liquid or liquefiable hydrocarbons other than Outside Substances within or produced from the Unitized Formation.

1.4 **Working Interest** is an interest in Unitized Substances by virtue of a lease, operating agreement, fee title, or otherwise, including a carried interest, the owner of which interest is obligated to pay, either in cash, out of production or otherwise, a portion of the Unit Expense; however, Oil and Gas Rights that are free of lease or other instrument creating a Working Interest shall be regarded as a Working Interest to the extent of seven-eighths (7/8ths) thereof and a Royalty Interest to the extent of one-eighth ($1/8^{th}$) thereof. Royalty Interest created out of a Working Interest subsequent to the execution of this Agreement by the owner of such Working Interest shall continue to be subject to such Working Interest burdens and obligations that are stated in this Agreement and the Unit Operating Agreement.

1.5 **Royalty Interest** is a right to or interest in any portion of the Unitized Substances or proceeds thereof other than a Working Interest.

1.6 **Royalty Owner** is a Person who owns a Royalty Interest.

1.7 **Working Interest Owner** is a Person owning a Working Interest.

1.8 **Tract** is the land described as such and given a Tract number in Exhibit "A".

1.9 **Unit Operating Agreement** is the Agreement entered into by Working Interest Owners, having the same Effective Date as this Agreement, entitled "Unit Operating Agreement (Operating Plan), Moose Field Unit, Logan County, Colorado".

1.10 **Unit Operator** is the Working Interest Owner or its agent designated by Working Interest Owners under the Unit Operating Agreement to conduct Unit Operations, acting as operator and not as a Working Interest Owner.

1.11 **Tract Participation** is the percentage shown on Exhibit "A", Part 3 for allocating Unitized Substances to a Tract.

1.12 **Unit Working Interest** of a Working Interest Owner is the sum of the percentages obtained by multiplying the Working Interest of such Working Interest Owner in each Tract that qualifies for inclusion within the Unit Area by the Tract Participation of such Tract.

1.13 **Outside Substances** are substances purchased or otherwise obtained for a consideration by Working Interest Owners and injected into the Unitized Formation.

1.14 **Oil and Gas Rights** are the rights to explore, develop, and operate lands within the Unit Area for the production of Unitized Substances, or to share in the production so obtained or the proceeds thereof.

1.15 **Unit Operations** are all operations conducted pursuant to this Agreement and Unit Operating Agreement.

1.16 **Unit Equipment** is all personal property, lease and well equipment, plants, and other facilities and equipment taken over or otherwise acquired for the joint account for use in Unit Operations.

1.17 **Unit Expense** is all cost, expense, expenditure or indebtedness incurred by Working Interest Owners or Unit Operator pursuant to this Agreement and the Unit Operating Agreement for or on account of Unit Operations.

1.18 **Effective Date** is the time and date this Agreement becomes effective as provided in Section 16.1.

1.19 **Person** is any individual, corporation, partnership, association, receiver, trustee, curator, executor, administrator, guardian, tutor, fiduciary, or other representative of any kind, any department, agency, or instrumentality of the state, or any governmental subdivision thereof, or any other entity capable of holding an interest in the Unitized Formation.

ARTICLE 2
EXHIBITS

2.1 **Exhibits.** The following exhibits, which are attached hereto, are incorporated herein by reference:

2.1.1 Exhibit **"A"** is a schedule that describes each Tract in the Unit Area and shows its Tract Participation. The four parts of Exhibit "A" are as follows:

Part 1 - Description of Tracts and Leases
Part 2 - Ownership of Tracts
Part 3 - Tract Participation
Part 4 - Unit Interests

2.1.2 **Exhibit "B", Part 1** is a map that shows the boundary lines of the Unit Area and the Tracts therein.

2.1.3 **Exhibit "B", Part 2** is a schedule showing the well renumbering for the wells in the Unit Area.

2.2 **Reference to Exhibits.** When reference is made to an Exhibit, it is to the Exhibit as originally attached or, if revised, to the last revision.

2.3 **Exhibits Considered Correct.** Exhibits "A" and "B" shall be considered to be correct until revised as herein provided.

2.4 **Correction of Errors.** The shapes and descriptions of the respective Tracts have been established by using the best information available. If it subsequently appears that any Tract, because of diverse royalty or working interest ownership on the Effective Date, should have been divided into more than one Tract, or that any mechanical miscalculation or clerical error has been made, Unit Operator, with the approval of the Working Interest Owners, shall correct the mistake by revising the Exhibits to conform to the facts. The revision shall not include any re-evaluation of engineering or geological interpretations used in determining Tract Participation. Each such revision of any exhibit made prior to thirty (30) days after the Effective Date shall be effective as of the Effective Date. Each such revision thereafter made shall be effective as of 7:00 A.M. Mountain Standard Time, on the first day of the calendar month next following the filing of record of the revised Exhibit or on such other date as may be determined by the Working Interest Owners and set forth in the revised Exhibit.

2.5 **Filing Revised Exhibits.** If an Exhibit is revised, Unit Operator shall execute an appropriate instrument with the revised Exhibit attached and file the same for record in the county or counties in which notice of this Agreement is filed.

ARTICLE 3
CREATION AND EFFECT OF UNIT

3.1 **Leases Ratified; Oil and Gas Rights Unitized.** Each Royalty Owner, by execution hereof, does hereby ratify, adopt and confirm the oil and gas lease(s) described in Exhibit "A", Part 1 hereof, insofar as said lease(s) cover(s) lands in which said Royalty Owner owns a mineral interest, in all of its (their) terms and provisions, and does hereby agree and declare that said oil and gas lease(s) are binding

upon them and are valid and subsisting lease(s), as of the Effective Date hereof.

In addition, all Oil and Gas Rights of Royalty Owners in and to the lands described in Exhibit "A", and all Oil and Gas Rights of the Working Interest Owners in and to said lands, are hereby unitized insofar as the respective Oil and Gas Rights pertain to the Unitized Formation, so that Unit Operations may be conducted with respect to the Unitized Formation as if the Unit Area had been included in a single lease executed by all Royalty Owners, as lessors, in favor of all Working Interest Owners, as lessee, and as if the lease contained all of the provisions of this Agreement.

3.2 **Personal Property Excepted.** All lease and well equipment, materials, and other facilities heretofore or hereafter placed by any of the Working Interest Owners on the lands covered hereby shall be deemed to be, and shall remain personal property belonging to, and may be removed by, Working Interest Owners, subject however to the rights and interests therein, as among Working Interest Owners, as are set forth in the Unit Operating Agreement.

3.3 **Amendment of Leases and Other Agreements.** The provisions of the various leases, agreements, division and transfer orders, or other instruments pertaining to the respective Tracts or the production therefrom are hereby amended to the extent necessary to make them conform to the provisions of this Agreement, but otherwise shall remain in effect.

3.4 **Continuation of Leases and Term Interests.** Production from any part of the Unitized Formation, except for the purpose of determining payments to Royalty Owners, or other Unit Operations, shall be considered as production from, or operations upon, each Tract, and such production or operations shall continue in effect each lease or term mineral or royalty interest as to all lands and formations covered thereby, just as if such operations were conducted on, and as if a well were producing from, each Tract.

3.5 **Titles Unaffected by Unitization.** Nothing herein shall be construed to result in the transfer of title to Oil and Gas Rights by any party hereto to any other party or to Unit Operator.

3.6 **Injection Rights.** Royalty Owners hereby grant Working Interest Owners the right to inject into the Unitized Formation any substances, including, but not limited to air, water, natural gas, liquefied petroleum gas, and/or carbon dioxide, in whatever amounts Working Interest Owners deem expedient for Unit Operations, together with the right to drill, use, and maintain injection wells on the Unit Area, and to use for injection purposes any non-producing or abandoned wells or dry holes, and any producing wells completed in the Unitized Formation.

3.7 **Disposal Rights.** Royalty Owners hereby grant Working Interest Owners the right to dispose of excess salt water produced from the Unitized Formation, together with the right to drill, use and maintain salt water disposal wells on the Unit Area, and to use for such disposal purposes any non-producing or abandoned wells, dry holes, or well drilled for salt water disposal purposes. Such salt water may disposed of into any formation or formations allowed by the Colorado Oil and Gas Conservation Commission.

3.8 Border Agreements. Unit Operator, upon approval of the Working Interest Owners, subject to the provisions of the Unit Operating Agreement, as a prudent means in the interest of conservation and to increase the ultimate recovery of Unitized Substances, may execute an agreement or agreements with the working interest owners in lands outside the Unit Area for cooperative development, operation, fluid or gas injection or similar programs. Any such Agreement shall be subject to approval by the Working Interest Owners and shall in no way affect or alter percentages or participation established hereunder, nor shall the same provide for the sharing or allocation of production as between the Unit Area, as herein defined, and any outside lands.

ARTICLE 4
PLAN OF OPERATIONS

4.1 Unit Operator. Working Interest Owners are concurrently herewith entering into the Unit Operating Agreement, designating ***Investment Equipment, LLC*** as the Unit Operator. Unit Operator shall have the exclusive right to conduct Unit Operations, which shall conform to the provisions of this Agreement and the Unit Operating Agreement. If there is any conflict between such agreements, this Agreement shall govern.

4.2 Method of Operation. To the end that the quantity of Unitized Substances ultimately recoverable may be increased and waste prevented, Working Interest Owners shall, with diligence, and in accordance with good engineering and production practices, engage in secondary recovery operations by injecting water, gas or other fluids or substances, or combinations thereof, deemed necessary or desirable to attempt to increase ultimate recovery of Unitized Substances.

4.3 Change of Method of Operation. Nothing herein shall prevent Working Interest Owners from discontinuing or changing in whole or in part any method of operation which, in their opinion, is no longer in accord with good engineering or production practices. Other methods of operation may be conducted or changes may be made by Working Interest Owners from time to time, if determined by them to be feasible, necessary or desirable to increase the ultimate recovery of Unitized Substances; including, without limitation, methods of operation for tertiary recovery and other enhanced recovery operations.

ARTICLE 5
TRACT PARTICIPATION AND ALLOCATION OF PRODUCTION

5.1 Tract Participation and Allocation of Production. Beginning at 7:00 A.M. Mountain Standard Time, on the Effective Date, the Tract Participation of each Tract shall be based upon the following factors and formula:

> The Tract Participation of each Tract has been determined on an acreage basis such that each tract will participate in the unit Area as to the number of acres of such tract bears to the total acres in the Unit Area.

The Tract Participation of each Tract is shown on Exhibit "A", Part 3.

5.2 **Relative Tract Participation**. If the Unit Area is enlarged or reduced, the revised Tract Participation of the Tracts remaining in the Unit Area, and which were within the Unit Area prior to the enlargement or reduction, shall remain in the same ratio to one another.

ARTICLE 6
ALLOCATION OF UNITIZED SUBSTANCES

6.1 **Allocation to Tracts.** All Unitized Substances produced and saved shall be allocated to the several Tracts in accordance with the respective Tract Participation. The amount of Unitized Substances allocated to each Tract, regardless of whether the amount is more or less than the actual production of Unitized Substances from the well or wells, if any, on such Tract, shall be deemed for all purposes to have been produced from such Tract.

6.2 **Distribution Within Tracts.** The Unitized Substances allocated to each Tract shall be distributed among, or accounted for to, the Persons entitled to share in the production from such Tract in the same manner, in the same proportions, and upon the same conditions, as they would have participated and shared in the production from such Tract, or in the proceeds thereof, had this Agreement not been entered into, and with the same legal effect. If any Oil and Gas Rights in a Tract are, or hereafter become, divided and owned in severalty as to different parts of the Tract, the owners of the divided interest, in the absence of an agreement providing for a different division, shall share in the Unitized Substances allocated to the Tract, or in the proceeds thereof, in the proportion that the acreage owned by each separate Owner bears to the total acreage included in the Tract so divided. Any royalty or other payment which depends upon per well production or pipeline runs from a well or wells on a Tract shall, after the Effective Date, be determined by dividing the Unitized Substances allocated to the Tract by the number of wells on the Tract capable of producing Unitized Substances on the Effective Date; however, if any Tract has no well thereon capable of producing Unitized Substances on the Effective Date, the Tract shall, for the purpose of this determination, be deemed to have one such well thereon.

6.3 **Taking Unitized Substances in Kind.** The Unitized Substances allocated to each Tract may be delivered in kind to the respective parties entitled thereto by virtue of the ownership of Oil and Gas Rights therein or by purchase from such owners. Such parties who elect to take in kind shall have the right to construct, maintain, and operate within the Unit Area all necessary facilities for the purpose, provided such facilities are so constructed, maintained, and operated as not to interfere with Unit Operations. Any extra expenditures incurred by Unit Operator by reason of the delivery in kind of any portion of the Unitized Substances shall be borne by the owner of such portion. If a Royalty Owner has the right to take in kind a share of Unitized Substances and fails to do so, the Working Interest Owner or Owners whose Working Interest(s) is (are) subject to such Royalty Interest shall be entitled to take in kind their proportionate part of such share of Unitized Substances.

6.4 **Failure to Take in Kind.** If any Person fails to take in kind or separately dispose of such Person's share of Unitized Substances, Unit Operator shall have the option, but not the obligation, subject to revocation at will by the Person owning the

share, to purchase or sell to others such share of Unitized Substances; however, all contracts for sale by Unit Operator of any other Person's share of Unitized Substances shall be only for such reasonable periods of time as are consistent with the minimum needs of the industry under the circumstances, but in no event shall any such contract be for a period in excess of one year.

6.5 Responsibility for Royalty Settlements. Any person receiving in kind or separately disposing of all or part of the Unitized Substances allocated to any Tract shall be responsible for the payment of all royalties, overriding royalties, production payments, and all other payments chargeable against or payable out of such Unitized Substances, and shall indemnify all Persons, including Unit Operator, against any liability for such payment.

6.6 Royalty on Outside Substances. If any Outside Substance consisting of natural gases is injected into the Unitized Formation, one hundred percent (100%) of any like substance contained in Unitized Substances subsequently produced and sold, or used for other than Unit Operations, shall be deemed to be a part of the Outside Substance so injected until the total volume deemed to be such Outside Substance equals the total volume of such Outside Substance so injected. If any Outside Substance which prior to injection is liquefied petroleum gas or other liquid hydrocarbons is injected into the Unitized Formation, fifty percent (50%) of all Unitized Substances produced and sold after the time the injection of such Outside Substance was commenced shall be deemed to be a part of the Outside Substances so injected until the total value of the production deemed to be such Outside Substance equals the total cost of the Outside Substance so injected. Such fifty percent (50%) of the Unitized Substances deemed to be Outside Substances will be in addition to that which is being recovered for natural gases as hereinabove provided, if both liquefied petroleum gas or other liquid hydrocarbons and natural gases are injected. No payment shall be due or payable to Royalty Owners on substances produced from the Unitized Formation that are deemed to be Outside Substances.

ARTICLE 7
PRODUCTION AS OF THE EFFECTIVE DATE

7.1 Oil and Liquid Hydrocarbons in Lease Tanks. Unit Operator shall gauge or otherwise determine the amount of merchantable oil or other liquid hydrocarbons produced from the Unitized Formation that are in lease tanks as of 7:00 A.M. Mountain Standard Time on the Effective Date. Oil and other liquid hydrocarbons in treating vessels, separation equipment, and tanks below pipeline connections shall not be considered to be merchantable. Any merchantable oil or other liquid hydrocarbons that are a part of, or attributable to, the wells from which they were produced shall remain the property of the parties entitled thereto, as if this Agreement had not been entered into. Any such merchantable oil or other liquid hydrocarbons not promptly removed may be sold by Unit Operator for the account of the Working Interest Owners entitled thereto who shall pay or cause to be paid all royalty due thereon under the provisions of applicable lease(s) or other contract(s).

ARTICLE 8
USE OR LOSS OF UNITIZED SUBSTANCES

8.1 **Use of Unitized Substances.** Working Interest Owners may use or consume Unitized Substances for Unit Operations, including but not limited to the injection thereof into the Unitized Formation.

8.2 **Royalty Payments.** No royalty, overriding royalty, production, or other payments shall be payable on account of Unitized Substances used, lost, or consumed in Unit Operations.

ARTICLE 9
TITLES

9.1 **Warranty and Indemnity.** Each Person who, by acceptance of produced Unitized Substances or the proceeds thereof, may claim to own a Working Interest or Royalty Interest in and to any Tract or in the Unitized Substances allocated thereto, shall be deemed to have warranted its title to such interest, and upon receipt of the Unitized Substances or the proceeds thereof to the credit of such interest, shall indemnify and hold harmless all other Persons in interest from any loss due to failure, in whole or in part, of its title to any such interest.

9.2 **Working Interest Titles.** If title to a Working Interest fails, the rights and obligations of Working Interest Owners by reason of such failure of title shall be governed by the Unit Operating Agreement.

9.3 **Royalty Interest Titles.** If title to a Royalty Interest fails, but the Tract to which it relates is not removed from the Unit Area, the person whose title failed shall not be entitled to share hereunder with respect to such interest.

9.4 **Production Where Title is in Dispute.** If the title or right of any Person claiming the right to receive all or any portion of the Unitized Substances allocated to a Tract is in dispute, Unit Operator at the direction of Working Interest Owners shall either:

(a) require that the Person to whom such Unitized Substances are delivered or to whom the proceeds thereof are paid furnish security for the proper accounting therefor to the rightful owner if the title or right of such Person fails in whole or in part, or

(b) withhold and market the portion of Unitized Substances with respect to which title or right is in dispute, and impound the proceeds thereof until such time as the title or right thereto is established by a final unappealable judgment of a court of competent jurisdiction or otherwise to the satisfaction of Working Interest Owners, whereupon the proceeds so impounded shall be paid to the Person rightfully entitled thereto.

9.5 **Payment of Taxes to Protect Title.** The owner of surface rights to lands within the Unit Area, and/or severed mineral interests or Royalty Interests in such lands, and/or in the lands outside the Unit Area on which Unit Equipment may be located, is responsible for the payment of any ad valorem taxes on all such surface, mineral and royalty rights and interests. If any ad valorem taxes are not paid by

or for such owner when due, Unit Operator may pay the tax and discharge any tax lien. Any such payment shall be an item of Unit Expense. Unit Operator shall, if possible, withhold from any proceeds derived from the sale of Unitized Substances otherwise due any delinquent taxpayer an amount sufficient to defray the cost of such payment, such withholding to be credited to Working Interest Owners. Such withholding shall be without prejudice to any other remedy available to Unit Operator or Working Interest Owners.

ARTICLE 10
EASEMENTS OR USE OF SURFACE

10.1 **Grant of Easements.** The Working Interest Owners shall have the right to use as much of the surface of the land within the Unit Area (including but not limited to, the right to lay, maintain, alter, repair, inspect, operate and remove any and all existing and future pipelines) as may be reasonably necessary for Unit Operations and the production and removal of Unitized Substances from the Unit Area.

10.2 **Use of Water.** Working Interest Owners shall have and are hereby granted free use of water from the Unit Area for Unit Operations from wells heretofore or hereafter drilled, or otherwise owned, by the Working Interest Owners. Working Interest Owners shall not have the right to use water from any well, lake, pond, or irrigation ditch owned by a Royalty Owner without paying compensation for such usage. Working Interest Owners shall also have the right to bring water from sources outside the Unit Area onto the premises for Unit Operations. Such off-premises water will be used for injection purposes only and will be injected only into Unit Area injection wells.

10.3 **Surface Damages.** Working Interest Owners shall pay the Person entitled thereto for damages to growing crops, timber, fences, improvements, and structures on the Unit Area that result from Unit Operations.

ARTICLE 11
AMENDMENTS TO UNIT AREA

11.1 **Unit Area.** The Unit Area may be amended from time to time to include acreage reasonably proved to be productive, exclude acreage no longer considered to be productive, or for any other reason, upon such terms as may be approved by the Working Interest Owners in accordance with the voting procedure of Article 4.3.2 of the Unit Operating Agreement, provided:

(a) the participation to be allocated to all acreage shall be fair and reasonable, considering all available information; and

(b) there shall be no retroactive allocation or adjustment of Unit Expense or of interests in the Unitized Substances produced, or proceeds thereof; however, this limitation shall not prevent an adjustment of investment by reason of the amendment.

11.2 **Determination of Tract Participation.** Unit Operator, subject to Section 5.2, shall determine the Tract Participation of each Tract within the Unit Area as amended, and shall revise Exhibits "A" and "B" accordingly.

11.3 **Effective Date.** The effective date of any amendment to the Unit Area shall be 7 A.M. Mountain Standard Time, on the first day of the calendar month following compliance with conditions for amendment as specified by Working Interest Owners, and the filing for record of a revised notice of this Agreement in the county or counties in which the original notice of Agreement is recorded.

ARTICLE 12
TRANSFER OF TITLE - PARTITION

12.1 **Transfer of Title.** Any conveyance of all or any part of any interest owned by any Person hereto with respect to any Tract shall be made expressly subject to this Agreement. No change of title shall be binding upon Unit Operator, or upon any Person hereto other than the Person so transferring, until 7:00 A.M. Mountain Standard Time, on the first day of the Calendar month next succeeding the date of receipt by Unit Operator of a certified copy of the recorded instrument evidencing such change in ownership.

12.2 **Waiver of Rights to Partition.** Each Person hereto agrees that, during the existence of this Agreement, it will not resort to any action to partition the Unitized Formation or the Unit Equipment, and to that extent hereby waives the benefits of all laws authorizing such partition.

ARTICLE 13
RELATIONSHIP OF PARTIES

13.1 **No Partnership.** The duties, obligations, and liabilities arising hereunder shall be several and not joint or collective. This Agreement is not intended to create, and shall not be construed to create, an association or trust, or to impose a partnership duty, obligation, or liability. Each Person affected hereby shall be individually responsible for its own obligations as herein provided.

13.2 **No Joint Refining or Marketing.** This Agreement is not intended to provide, and shall not be construed to provide, directly or indirectly, for any joint refining or marketing of Unitized Substances.

13.3 **Royalty Owners Free of Cost.** This Agreement is not intended to impose, and shall not be construed to impose, upon any Royalty Owner any obligation to pay Unit Expense unless such Royalty Owner is otherwise obligated; provided, however, that any interest created out of a Working Interest shall be subject to the security rights provided by the Unit Operating Agreement. The owner of any such interest shall be subrogated to the security rights available against the Working Interest out of which such interest was created.

ARTICLE 14
LAWS AND REGULATIONS

14.1 **Laws and Regulations.** This Agreement shall be subject to all applicable federal, state, and municipal laws, rules, regulations, and orders.

ARTICLE 15
FORCE MAJEURE

15.1 **Force Majeure.** All obligations imposed by this Agreement, except for the payment of money, shall be suspended while compliance is prevented, in whole or in part, by a labor dispute, fire, war, civil disturbance, act of God; by federal, state, or municipal laws; by any rule, regulation, or order of a governmental agency; by inability to secure materials, or by any other cause or causes, whether similar or dissimilar, beyond reasonable control of the Person. No Person shall be required against their will to adjust or settle any labor dispute. Neither this Agreement nor any lease or other instrument subject hereto shall be terminated by reason of suspension of Unit Operations due to any one or more of the causes set forth in this Article.

ARTICLE 16
EFFECTIVE DATE

16.1 **Effective Date.** This Agreement shall become effective as of 7:00 A.M., Mountain Standard Time on the first day of the calendar month following the issuance of the order approving this Unit by the Colorado Oil and Gas Conservation Commission in accordance with CRS 35-60-118, whichever first occurs.

16.2 **Certificate of Effectiveness.** Unit Operator shall file for record in the county in which the land affected is located a notice and certificate of unitization stating the Effective Date.

ARTICLE 17
DETERMINATIONS BY WORKING INTEREST OWNERS

17.1 **Determination by Working Interest Owners.** All decisions, determinations, or approvals by Working Interest Owners hereunder shall be made pursuant to the voting procedure of the Unit Operating Agreement unless otherwise provided herein.

ARTICLE 18
TERM

18.1 **Term.** The term of this Agreement shall be for the period of time that the Unit Operations are conducted without a cessation of more than one hundred and eighty (180) consecutive days, unless terminated at an earlier date by Working Interest Owners in the manner herein provided.

18.2 **Termination by Working Interest Owners.** This Agreement may be terminated by Working Interest Owners owning a combined Unit Working Interest of more than fifty percent (50%) whenever such Working Interest Owners determine that Unit Operations are no longer profitable or feasible.

18.3 **Effect of Termination.** Upon termination of this Agreement, the further development and operation of the Unitized Formation as a unit shall be abandoned, and Unit Operations shall cease. Each oil and gas lease and other agreements covering lands within the Unit Area shall remain in force for one hundred eighty (180) days after the date on which this Agreement terminates, and thereafter for such further period as is provided by the lease or other agreement.

18.4 Salvaging Equipment Upon Termination. Royalty Owners hereby grant Working Interest Owners a period of nine (9) months after the date of termination of this Agreement within which to salvage and remove Unit Equipment.

18.5 Certificate of Termination. Upon Termination of this Agreement, Unit Operator shall file for record in the county in which the land affected is located, a certificate that this Agreement has terminated, stating its termination date.

ARTICLE 19
GENERAL

19.1 Unit Agreement and Unit Operating Agreement. As provided for in Section 4.1, Unit Operator shall have the right to conduct Unit Operations, which shall conform to the provisions of the Unit Agreement and the Unit Operating Agreement. If there is any conflict between such agreements, the Unit Agreement shall govern.

19.2 Lien and Security Interest. Unit Operator shall have a lien and security interest upon the interests of the Working Interest Owners and upon any interests carved out of a Working Interest to the extent provided in the Unit Operating Agreement.

19.3 Conflicts with Existing Instrument. This Agreement shall supersede all existing agreements between the parties hereto covering the Unit Area to the extent that the provisions of such existing agreements conflict with the provisions of this Agreement.

ARTICLE 20
SUCCESSORS AND ASSIGNS

20.1 Successors and Assigns. This Agreement shall extend to, be binding upon, and inure to the benefit of the parties hereto and their respective heirs, devisees, legal representatives, successors, and assigns, and shall constitute a covenant running with the lands, leases and interests covered thereby.

ARTICLE 21
EXECUTION

21.1 Original, Counterpart, or Other Instrument. This Agreement may be executed in any number of counterparts, no one of which needs to be executed by all parties, or may be ratified or consented to by separate instrument in writing specifically referring hereto, and shall be binding upon all those parties who have executed such a counterpart, ratification, or consent hereto with the same force and effect as if all such parties had signed the same document and regardless of whether or not it is executed by all other parties owning or claiming an interest in the land within the above-described Unit Area.

21.2 Joinder in Dual Capacity. In the event any of the parties hereto own both Working Interest and Royalty Interests, it shall not be necessary for such party to execute this Agreement in both capacities in order to commit both classes of interest. Execution

hereby by any such party in one capacity shall also constitute execution in the other capacity.

IN WITNESS WHEREOF, this Agreement is approved on the dates of execution, but effective as of the Effective Date.

EXHIBIT "A", Part 1
Description of Tracts

Attached to and made a part of the Moose Field Unit Agreement
Logan County, Colorado

TRACT NO.	DESCRIPTION

EXHIBIT "A", Part 2

Description of Leases

Attached to and made a part of the Moose Field Unit Agreement
Logan County, Colorado

Note: All references to recording data refer to the records of Logan County, Colorado

EXHIBIT "A", PART 2

Ownership of Tracts

Attached to and made a part of the Moose Field Unit Agreement

Logan County, Colorado

Note: "RI" denotes Royalty Interest, "OR" denotes Overriding Royalty Interest, "WI" denotes Working Interest and "NRI" denotes Net Revenue Interest herein

Tract __

[LAND DESCRIPTION] . Logan Co., CO

Owner & Address	Int. Type	Tract WI	Tract NRI
TRACT TOTALS		100.0000000%	100.0000000%

Moose Field WFU

Tract 2 - Moose Field West

[LAND DESCRIPTION], Logan Co., CO

Owner & Address	Int. Type	Tract WI	Tract NRI

EXHIBIT "A", PART 3

Unit Tract Participation Factors

Attached to and made a part of the Moose Field Unit Agreement

Logan County, Colorado

Tract Number	Tract Part. Fact.
Total	100.00%

EXHIBIT "A", PART 4

Unit Interests

Attached to and made a part of the Moose Field Unit Agreement

Logan County, Colorado

WORKING INTERESTS

OWNER	INT TYPE	UNIT INTEREST
TOTAL		100.0000000%

REVENUE INTERESTS

OWNER	INT TYPE	UNIT INTEREST
TOTALS		100.0000000%

EXHIBIT "B", PART 1

Unit Boundary and Tracts

Attached to and made a part of the Moose Field Unit Agreement

Logan County, Colorado

EXHIBIT "B", PART 2

Well Renumbering

Attached to and made a part of the Moose Field Unit Agreement

Logan County, Colorado

TRACT	CURRENT WELL NAME	NEW WELL NAME

EXHIBIT I

UNIT OPERATING AGREEMENT
(OPERATING PLAN)
Moose Field Unit
Logan County, Colorado

THIS AGREEMENT is entered into as of the _____ day of _____, 2012.

WITNESSETH:

WHEREAS, an agreement entitled "Unit Agreement, Plan of Unitization, Moose Field Unit, Logan County, Colorado", herein referred to as "Unit Agreement" has been made which, among other things, provides for a separate agreement to govern Unit Operations as therein defined.

NOW, THEREFORE, it is provided as follows:

ARTICLE 1
CONFIRMATION OF UNIT AGREEMENT

1.1 **Confirmation of Unit Agreement.** The Unit Agreement is hereby confirmed and by reference made a part of this Agreement. The definitions in the Unit Agreement are adopted for all purposes of this Agreement. If there is any conflict between the Unit Agreement and this Agreement, the Unit Agreement shall govern. This Agreement shall supersede all existing agreements by and among the parties hereto covering the Unit Area to the extent that the provisions of such existing agreements conflict with the provisions of this Agreement.

ARTICLE 2
EXHIBITS

2.1 **Exhibits.** The following are incorporated herein by reference or attachment:

2.1.1 **Exhibits "A" (Parts 1 through 4) and "B" (Parts 1 and 2)**, as described in the Unit Agreement.

2.1.2 **Exhibit "C"**, attached hereto, is the Accounting Procedure applicable to Unit Operations. If there is any conflict between this Agreement and Exhibit "C", this Agreement shall govern.

2.1.3 **Exhibit "D"**, attached hereto, contains insurance provisions applicable to Unit Operations.

2.2 **Reference to Exhibits.** When reference is made herein to an Exhibit, it is to the original Exhibit or, if revised, to the last revision.

ARTICLE 3
SUPERVISION OF OPERATIONS BY WORKING INTEREST OWNERS

3.1 **Overall Supervision.** Working Interest Owners shall exercise overall supervision and control of all matters pertaining to Unit Operations. In the exercise of such authority, each Working Interest Owner shall act solely in its own behalf in the capacity of an individual owner and not on behalf of the owners as an entirety.

3.2 **Specific Authority and Duties.** The matters with respect to which Working Interest Owners shall decide and take action shall include, but

not be limited to, the following:

3.2.1 **Method of Operation.** The method of operation, including any type of pressure maintenance, secondary recovery, tertiary recovery or other recovery program to be employed.

3.2.2 **Drilling of Wells.** The drilling of any well whether for production of Unitized Substances, for use as an injection well, or for other purposes.

3.2.3 **Well Recompletions and Change of Status.** The recompletion, abandonment, or change of status of any well, or the use of any well for injection or other purposes.

3.2.4. **Unit Operator's Tools and Equipment.** The use by Unit Operator of its own tools and equipment in the drilling of a well or in any other operation. The charges by Unit Operator, for use of tools, equipment or crews which are owned, fully or partially by Unit Operator or a related party thereof shall not unreasonably exceed the prevailing rates in the area, and any such work shall be performed under the same general terms and conditions as are customary and usual in the area under contracts of independent contractors who are doing work of a similar nature.

3.2.5 **Expenditures.** The making of any single expenditure in excess of Fifty Thousand Dollars ($50,000.00); however, approval by Working Interest Owners of the drilling, reworking, deepening or plugging back of any well shall include approval of all necessary expenditures required therefor, and for completing, testing and equipping the well, including necessary flow lines, separators, and lease tankage.

3.2.6 **Disposition of Unit Equipment.** The selling or otherwise disposing of any item of surplus Unit Equipment, if the current price of new equipment similar thereto is in excess of Fifty Thousand Dollars ($50,000.00).

3.2.7 **Appearance Before a Court or Regulatory Agency.** The designating of a representative to appear before any court or regulatory agency in matters pertaining to Unit Operations; however, such designation shall not prevent any Working Interest Owner, at its own expense, from appearing in person or from designating another representative in its own behalf.

3.2.8 **Audit Exceptions.** The settlement of unresolved audit exceptions.

3.2.9 **Inventories.** The taking of periodic inventories as provided by Exhibit "C".

3.2.10 **Technical Services.** The authorizing of charges to the Joint Account for services by consultants or Unit Operator's technical personnel not covered by the charges provided by Exhibit "C".

3.2.11 **Assignments to Committees.** The appointment of committees to study any problems in connection with Unit Operations.

3.2.12 **Changes and Amendments.** The amending of this Agreement, or as provided for in Article 11 of the Unit Agreement, the amending of the Unit Area.

3.2.13 **Investment Adjustments.** The adjustment and readjustment of

investments.

3.2.14 **Termination of Unit Agreement.** The termination of the Unit Agreement as provided therein.

ARTICLE 4
MANNER OF EXERCISING SUPERVISION

4.1 **Designation of Representatives.** Each Working Interest Owner shall inform Unit Operator in writing of the names and addresses of the representative and alternate who are authorized to represent and bind such Working Interest Owner with respect to Unit Operations. The representative or alternate may be changed from time to time by written notice to Unit Operator.

4.2 **Meetings.** All meetings of Working Interest Owners shall be called by Unit Operator upon its own motion or at the request of one or more Working Interest Owner having a total Unit Working Interest of not less than ten percent (10%). No meeting shall be called on less than fourteen (14) days advance written notice, with agenda for the meeting attached, provided, however, any such meeting may be requested by Unit Operator or such Working Interest Owners upon 48-hours notice where an emergency situation exists. Working Interest Owners who attend the meeting may amend items included in the agenda and may act upon an amended item or other items presented at the meeting. The representative of Unit Operator shall be chairman of each meeting.

4.3 **Voting Procedure.** Working Interest Owners shall determine all matters coming before them as follows:

4.3.1 **Voting Interest.** Each Working Interest Owner shall have a voting interest equal to its Unit Working Interest.

4.3.2 **Vote Required.** Unless otherwise provided herein or in the Unit Agreement, Working Interest Owners shall determine all matters by the affirmative vote of one (1) or more Working Interest Owner or Owners having a combined voting interest of more than fifty percent (50%) of the total Unit Working Interest.

4.3.3 **Vote at Meeting by Nonattending Working Interest Owner.** Any Working Interest Owner who is not represented at a meeting may vote on any agenda item by letter or facsimile addressed to the representative of Unit Operator if its vote is received prior to the vote at the meeting. Such vote shall not be counted with respect to any item on the agenda which is amended at the meeting.

4.3.4 **Poll Votes.** Working Interest Owners may vote by letter or facsimile on any matter submitted in writing to all Working Interest Owners. If a meeting is not called, as provided in Article 4.2, within seven (7) days after a written proposal is sent to Working Interest Owners, the vote taken by letter or facsimile shall control. Failure by a Working Interest Owner to vote on any matter submitted in writing to the Working Interest Owners, within twenty (20) days from receipt of such proposal, shall be deemed a vote approving the matter. Unit Operator shall give prompt notice of the results of such voting to each Working Interest Owner.

4.3.5 **Approved Action Binding Upon All Parties.** Any action, determination or decision which has been approved by the Working Interest Owners pursuant to this Article 4 shall be binding upon each

and every Working Interest Owner, even though any such owner has not voted, or has voted to the contrary.

ARTICLE 5
INDIVIDUAL RIGHTS OF WORKING INTEREST OWNERS

5.1 **Reservation of Rights.** Working Interest Owners retain all their rights, except as otherwise provided in this Agreement or the Unit Agreement.

5.2 **Specific Rights.** Each Working Interest Owner shall have, among others, the following specific rights:

5.2.1 **Access to Unit Area.** Access to the Unit Area at all reasonable times to inspect Unit Operations, all wells, and the records and data pertaining thereto.

5.2.2 **Reports.** The right to receive from Unit Operator, upon written request, copies of all reports to any governmental agency, reports of crude oil runs and stocks, inventory reports, and other information pertaining to Unit Operations. The cost of gathering and furnishing information not ordinarily furnished by Unit Operator to all Working Interest Owners shall be charged to the Working Interest Owner that requests the information.

5.2.3 **Audits.** The right to audit the accounts of Unit Operator pertaining to Unit Operations according to the provisions of Exhibit "C".

ARTICLE 6
UNIT OPERATOR

6.1 **Unit Operator.** [redacted] is hereby designated as the initial Unit Operator.

6.2 **Resignation.** Unit Operator, or any successor Unit Operator, may resign at any time by giving written notice to the Working Interest Owners. Such resignation shall not become effective for a period of three (3) months, unless a successor Unit Operator has taken over Unit Operations prior to the expiration of such period.

If Unit Operator terminates its legal existence, becomes insolvent, bankrupt, or is placed in receivership, or is no longer capable of serving as Unit Operator, Unit Operator shall be deemed to have resigned without any action except the selection of a successor Unit Operator in the manner set forth in Article 6.3. A change of corporate name or structure by [UNIT OPERATOR], a transfer of operations by [UNIT OPERATOR] to one or more affiliated, subsidiary or parent corporation(s) or other entity(ies), or any merger by [UNIT OPERATOR], shall not be the basis for its resignation as Unit Operator hereunder.

6.3 **Selection of Successor.** Upon the resignation of Unit Operator, a successor Unit Operator shall be selected by the affirmative vote of one (1) or more Working Interest Owner or Owners having a combined voting interest of more than fifty percent (50%) of the Unit Working Interest.

ARTICLE 7
AUTHORITY AND DUTIES OF UNIT OPERATOR

7.1 **Exclusive Right to Operate Unit.** Subject to the provisions of this Agreement, Unit Operator shall have the exclusive right and be obligated to conduct Unit Operations.

7.2 **Workmanlike Conduct.** Unit Operator shall conduct Unit Operations in a good and workmanlike manner as would a prudent operator under the same or similar circumstances. Unit Operator shall freely consult with Working Interest Owners and keep them informed of all matters which Unit Operator, in the exercise of its best judgment, considers important. Unit Operator shall not be liable to Working Interest Owners for damages of any nature, unless such damages result from its gross negligence or willful misconduct.

7.3 **Liens and Encumbrances.** Unit Operator shall endeavor to keep the lands and leases in the Unit Area and Unit Equipment free from all liens and encumbrances occasioned by Unit Operations.

7.4 **Employees.** The number of employees used by Unit Operator in conducting Unit Operations, their selection, hours of labor, and compensation shall be determined by Unit Operator.

7.5 **Records.** Unit Operator shall keep correct books, accounts and records of Unit Operations.

7.6 **Reports to Working Interest Owners.** Unit Operator shall furnish quarterly reports of Unit Operations to all Working Interest Owners who request same.

7.7 **Reports to Governmental Authorities.** Unit Operator shall make all reports to governmental authorities that it has the duty to make as Unit Operator.

7.8 **Engineering and Geological Information.** Unit Operator shall furnish to a Working Interest Owner, upon written request, a copy of all logs and other engineering and geological data pertaining to wells drilled for Unit Operations.

7.9 **Expenditures.** Unit Operator is authorized to make single expenditures not in excess of Fifty Thousand Dollars ($50,000.00) without prior approval of Working Interest Owners. In the event of an emergency, Unit Operator may immediately make or incur such expenditures as in its opinion are required to deal with the emergency. Unit Operator shall report to Working Interest Owners, as promptly as possible, the nature of the emergency and the action taken.

7.10 **Border Agreements.** Unit Operator may, after approval by Working Interest Owners, enter into border agreements with respect to land adjacent to the Unit Area for the purpose of coordinating operations.

ARTICLE 8
TAXES

8.1 **Property and Ad Valorem Taxes.** Beginning with the first rendition due after the Effective Date hereof, Unit Operator shall amend and file all necessary property and ad valorem tax renditions and returns with the proper taxing authorities with respect to all property of each Working Interest Owner used or held by Unit Operator for Unit Operations.

Unit Operator shall settle assessments arising therefrom. Unit Operator shall collect or cause to be collected from each Working Interest Owner all such taxes.

8.2 **Other Taxes.** Each Working Interest Owner shall pay or cause to be paid all production, severance, gathering, and other taxes imposed upon or with respect to the production or handling of its share of Unitized Substances.

8.3 **Income Tax Election.** It is agreed that the provisions of this agreement are not intended to create, and shall not be considered or construed as creating, a joint venture, mining or other partnership, and that each Working Interest Owner shall only be liable for its proportionate share of any costs, losses and expenses incurred pursuant to the provisions hereof. If, for Federal Income Tax purposes, this Agreement and the operations hereunder are regarded as a partnership, then each Person hereby affected elects to be excluded from the application of all of the provisions of Sub-chapter K, Chapter 1, Subtitle A, of the Internal Revenue Code of 1986, as amended, as permitted and authorized by Section 761 of the Code and the regulations promulgated thereunder. Unit Operator is authorized and directed to execute on behalf of each Person hereby affected such evidence of this election as may be required by the Secretary of the Treasury of the United States or the Federal Internal Revenue Service, including specifically, but not by way of limitation, all of the returns, statements, and the data required by Federal Regulations. Should there be any requirement that each Person hereby affected give further evidence of this election, each such Person shall execute such documents and furnish such other evidence as may be required by the Federal Internal Revenue Service or as may be necessary to evidence this election. No such Person shall give any notices or take any other action inconsistent with the election made hereby. If any present or future income tax laws of the state or states in which the Unit Area is located or future income tax laws of the United States contain provisions similar to those in Subchapter K, Chapter 1, Subtitle A, of the Internal Revenue Code of 1986, as amended, under which an election similar to that provided by Section 761 of the Code is permitted, each Person hereby affected shall make such election as may be permitted or required by such laws. In making the foregoing election, each such Person states the income derived by such Person from Unit Operations can be adequately determined without the computation of partnership taxable income.

ARTICLE 9
INSURANCE

9.1 **Insurance.** Unit Operator, with respect to Unit Operations, shall:

(a) comply with the Workman's Compensation Laws of the state of Colorado,

(b) comply with the Employer's Liability and other insurance requirements of the laws of the state of Colorado, and

(c) provide insurance or other protection as set forth in Exhibit "D".

ARTICLE 10
ADJUSTMENT OF INVESTMENTS

10.1 **Property Taken Over.** Upon the Effective Date, Working Interest Owners shall deliver to Unit Operator the following:

10.1.1 **Wells.** All wells completed in the Unitized Formation or otherwise needed for Unit operations, as determined by Unit Operator.

10.1.2 **Equipment.** The casing and tubing in each such well, the wellhead connections thereon, and all other lease and operating equipment that is used in the operation of such wells which Unit Operator determines is necessary or desirable for conducting Unit Operations. Unit Operator shall have up to one hundred twenty (120) days subsequent to the commencement date of injection within which to make all such determinations. Upon Unit Operator determining that any equipment is surplus, such equipment shall be returned to the operator for the Working Interest Owners who delivered same to Unit Operator, and such equipment shall not be considered to have been taken over under this Article.

10.1.3 **Records.** A copy of all production and well records for such wells; and any other pertinent information and records requested by Unit Operator.

10.2 **Inventory and Evaluation.** An Inventory Committee shall, at Unit Expense, inventory and evaluate the personal property taken over and shall submit such inventory to the Working Interest Owners for approval.

10.2.1 **Equipment and Materials.** The inventory and evaluation shall include, but shall not be limited to, those items of equipment and material normally considered controllable by operators of oil and gas properties, excluding casing, as indicated in the latest revision of the Material Classification Manual by the Council of Petroleum Accountants Societies of North America.

10.2.2 **Non-Usable and Junk Equipment.** Non-usable and junk equipment and material will not be taken over by Unit Operator, but such items will remain the property of the Working Interest Owner(s) owning same prior to the Effective Date. Such Working Interest Owner(s) shall be responsible for the disposal of such non-usable and junk equipment and other materials within thirty (30) days of written request by Unit Operator. In the event such Working Interest Owner(s) does/do not dispose of such equipment within the aforedescribed time period, Unit Operator shall dispose of such equipment and invoice the individual Working Interest Owner(s) owning same for the cost of disposal, which invoice shall, as to such Working Interest Owner(s), be considered an item of Unit Expense.

10.2.3 **Loaned Equipment Provision.** Unit Operator shall have the use of such items of equipment not needed in the conduct of Unit Operations under this Agreement, but necessary to continue operating practices employed prior to the Effective Date. All lease and well equipment not required for Unit Operations, and which will not be evaluated as provided herein, including that equipment retained by Unit Operator, shall be returned within one hundred twenty (120) days subsequent to the commencement date of injection to the Working Interest Owner(s) who owned same prior to the Effective Date.

10.2.4 **Inventory Expense.** The cost of performing and compiling the physical inventory shall be an item of Unit Expense. The costs incurred

by employees of the individual Working Interest Owners in witnessing the physical inventory or participating on the Inventory Committee shall be borne by such Working Interest Owners.

10.3 **Investment Adjustment.** Upon approval by Working Interest Owners of the inventory and evaluation, each Working Interest Owner shall be credited with the value of its interest in all wells, equipment and materials taken over under Article 10.1, and shall be charged with an amount equal to that obtained by multiplying the total value of all wells, equipment and materials taken over under Article 10.1 by such Working Interest Owner's Unit Working Interest. If the charge against any Working Interest Owner is greater than the amount credited to such Working Interest Owner, the resulting net charge shall be an item of Unit Expense chargeable against such Working Interest Owner. If the credit to any Working Interest Owner is greater than the amount charged against such Working Interest Owner, the resulting net credit shall be paid to such Working Interest Owner by Unit Operator out of funds received by it in settlement of the net charges described above.

10.4 **General Facilities.** The acquisition of warehouses, warehouse stocks, lease houses, camps, facility systems, and office buildings necessary for Unit Operations shall be negotiated by the Unit Operator, subject to the approval of Working Interest Owners.

10.5 **Ownership of Property and Facilities.** Each Working Interest Owner, individually, shall by virtue hereof own an undivided interest, in all personal property and facilities acquired by the Unit Operator pursuant to this Agreement equal to its Unit Working Interest.

ARTICLE 11
UNIT EXPENSE

11.1 **Basis of Charge to Working Interest Owners.** Unit Operator initially shall pay all Unit Expense. Each Working Interest Owner shall reimburse Unit Operator for its share of Unit Expense. Each Working Interest Owner's share of Unit Expense shall be the same as its Unit Working Interest. Each Working Interest Owner's share of all capital expenditures shall be the same as its Unit Working Interest. All charges, credits and accounting for Unit Expense shall be in accordance with Exhibit "C".

11.2 **Advance Billings.** Unit Operator shall have the right to require Working Interest Owners to advance their respective shares of estimated Unit Expense by submitting to Working Interest Owners, on or before the 1st day of any month, an itemized estimate thereof for the succeeding month, with a request for payment in advance. Within thirty (30) days thereafter, each Working Interest Owner shall pay to Unit Operator its share of such estimate. Adjustments between estimated and actual Unit Expense shall be made by Unit Operator at the close of each calendar month, and the accounts of Working Interest Owners shall be adjusted accordingly.

11.3 **Commingling of Funds.** Funds received by Unit Operator under this Agreement need not be segregated or maintained by it as a separate fund, but may be commingled with its own funds.

11.4 **Unpaid Unit Expense.** If any Working Interest Owner fails or is unable to pay its share of Unit Expense within sixty (60) days after rendition of a statement therefor by Unit Operator, the unpaid balance shall, if Unit Operator so elects, be paid to Unit Operator by the non-

defaulting Working Interest Owners as if it were Unit Expense, in the proportion that the Unit Working Interest of each such non-defaulting Working Interest Owner bears to the total Unit Working Interest owned by all such non-defaulting Working Interest Owners. Such unpaid amount shall bear interest at the rate provided in Exhibit "C". Working Interest Owners so paying the same shall be reimbursed therefor, together with interest thereon, when the amount so carried and the interest thereon are collected from the Working Interest Owner primarily chargeable therewith. The amount carried shall be due and payable out of the proceeds from the defaulting Working Interest Owner's share of Unit sales. During the time that any Working Interest Owner fails to pay its share of Unit Expense, the Unit Operator shall be entitled to collect and receive from the purchaser the proceeds from such Working Interest Owner's share of the Unit sales and any such purchaser shall be entitled to rely, without liability, upon Articles 11.4 and 11.5 hereof as full and complete authorization to release such funds to Unit Operator, and, further, to rely, without liability, upon Unit Operator's statement of any and all amounts due from such Working Interest Owner. All credits to any such defaulting Working Interest Owner on account of the sale or disposal of Unit Equipment, or otherwise, shall also be applied against the unpaid share of Unit Expense charged against such Working Interest Owner.

11.5 **Security Rights.** In addition to any other security rights and remedies provided for by the laws of the State of Colorado with respect to services rendered, or materials and equipment furnished under this Agreement, each Working Interest Owner grants to Unit Operator a first and prior lien upon each Working Interest including its Oil and Gas Rights in the Unit Area, and a security interest in its share of oil and/or gas when extracted and its interest in all equipment to secure payment of its share of Unit Expense, together with interest thereon at the rate provided in Exhibit "C". To the extent that Unit Operator has a security interest under the Uniform Commercial Code of the State, Unit Operator shall be entitled to exercise the rights and remedies of a secured party under the Code. The bringing of a suit and obtaining of a judgment by Unit Operator for the secured indebtedness shall not be deemed an election of remedies or otherwise affect the lien rights or security for the payment thereof. In addition, upon default by any Working Interest Owner in the payment of its share of Unit Expense, Unit Operator shall have the right, without prejudice to other rights or remedies, to collect from the purchaser the proceeds from the sale of such Working Interest Owner's share of oil and gas until the amount owed by such Working Interest Owner, plus interest, has been paid. This paragraph shall serve as legal notice to any purchaser of oil and/or gas of Unit Operator's right to collect proceeds when accompanied by Unit Operator's written statement concerning the amount of any default. Unit Operator grants a lien and security interest to the Working Interest Owners in the Unit Operator's interests to secure payment of Unit Operator's proportionate share of Unit Expense. Each Person shall have a lien upon and a security interest in the interests of each other.

If any Working Interest Owner fails or is unable to pay its share of Unit Expense within sixty (60) days after rendition of a statement therefor by Unit Operator, the non-defaulting Working Interest Owners shall, upon request by Unit Operator, pay the unpaid amount in the proportion that the interest of each such Working Interest Owner bears to the interest of all such non-defaulting Working Interest Owners. Each Working Interest Owner so paying its share of the unpaid amount shall, to obtain reimbursement thereof, be subrogated to the security rights described in the foregoing paragraph.

11.6 **Default.** In addition to the foregoing, in the event a Working

Interest Owner fails to pay any billing within sixty (60) days of its receipt of invoice, Unit Operator shall have the option at any time thereafter while such billing remains unpaid to notify said Working Interest Owner of Unit Operator's intention to deem said Working Interest Owner as a Non-Consenting Working Interest Owner under the provisions of Article 20.1 below in the event payment of such billing is not made. Any such notice by Unit Operator shall be sent by certified mail, return receipt requested, and shall provide the notified Working Interest Owner fifteen (15) days from receipt of the notice in which to make payment. Upon failure of said Working Interest Owner to pay in full within the fifteen (15) day period, Unit Operator shall notify said Working Interest Owner that it has been deemed a Non-Consenting Working Interest Owner under the provisions of Article 20.1.

11.7 **Carved-out Interests.** Any overriding royalty, production payment, net proceeds interest, carried interest or any other interest carved out of a Working Interest shall be subject to this Agreement. If a Working Interest Owner does not pay its share of Unit Expense and the proceeds from the sale of Unitized Substances are insufficient for that purpose, the security rights provided for in this Unit Operating Agreement may be applied against such carved-out interests with which such Working Interest is burdened. In such event, the owner of such carved-out interest shall be subrogated to security rights granted by Article 11.5.

ARTICLE 12
NONUNITIZED FORMATIONS

12.1 **Right to Operate.** Any Working Interest Owner that now has or hereafter acquires the right to drill for and produce oil, gas, or other minerals from a formation underlying the Unit Area other than the Unitized Formation shall have the right to do so notwithstanding this Agreement or the Unit Agreement. In exercising the right, however, such Working Interest Owner shall exercise care to prevent unreasonable interference with Unit Operations. No Working Interest Owner other than Unit Operator shall produce Unitized Substances. If any Working Interest Owner drills any well into or through the Unitized Formation, the Unitized Formation shall be protected in a manner satisfactory to Working Interest Owners so that the production of Unitized Substances will not be affected adversely.

ARTICLE 13
TITLES

13.1 **Warranty and Indemnity.** Each Working Interest Owner represents and warrants that it is the owner of the respective Working Interests set forth opposite its name in Exhibit "A", Part 2 of the Unit Agreement, and agrees to indemnify and hold harmless the other Working Interest Owners from any loss due to failure, in whole or in part, of its title to any such interest, except failure of title arising because of Unit Operations; however, such indemnity and any liability for breach of warranty shall be limited to an amount equal to the net value that has been received from the sale or receipt of Unitized Substances attributed to the interest as to which title failed. Each failure of title will be deemed to be effective, insofar as this Agreement is concerned, as of 7:00 A.M. Central Standard Time on the first day of the calendar month in which such failure is finally determined and there shall be no retroactive adjustment of Unit Expense, or retroactive allocation of Unitized Substances or the proceeds therefrom, as a result of title failure.

13.2 **Failure because of Unit Operations.** The failure of title of any

Working Interest in any Tract by reason of Unit Operations, including non-production from such Tract, shall not change the Unit Working Interest of the Working Interest Owner whose title failed in relation to the Unit Working Interest of the other Working Interest Owners at the time of the title failure.

13.3 **Individual Loss.** Any Working Interest Owner whose title fails shall alone bear the loss, and hereby expressly agrees to indemnify all other Working Interest Owners, against any claim for damages arising from such failure which may be asserted against them. Unit Operator, as such, is relieved from any responsibility for any defect or failure of any title hereunder, except failure that may be caused by or results from the gross negligence or willful misconduct of Unit Operator.

ARTICLE 14
LIABILITY, CLAIMS AND SUITS

14.1 **Individual Liability.** The duties, obligations, and liabilities of Working Interest Owners shall be several and not joint or collective; and nothing herein shall ever be construed as creating a partnership of any kind, joint venture, association, or trust among Working Interest Owners.

14.2 **Settlements.** Unit Operator may settle any single claim or suit involving Unit Operations if the expenditure does not exceed Fifty Thousand Dollars ($50,000.00). If the amount required for settlement exceeds the above amount, Working Interest Owners shall determine the further handling of the claim or suit. All costs and expense of handling, settling, or otherwise discharging such claim or suit shall be an item of Unit Expense. If a claim is made against any Working Interest Owner on account of any matter arising from Unit Operations over which such Working Interest Owner individually has no control because of the rights given Working Interest Owners and Unit Operator by this Agreement and the Unit Agreement, the Working Interest Owner shall immediately notify Unit Operator and the claim or suit shall be treated as any other claim or suit involving Unit Operations.

14.3 **Notice of Loss.** Unit Operator shall make its best efforts to report to Working Interest Owners as soon as practicable after each occurrence, damage or loss to Unit Equipment, and each accident, occurrence, claim, or suit involving third party bodily injury or property damage exceeding Fifty Thousand Dollars ($50,000.00), but shall have no liability for failure to do so.

14.4 **Force Majeure.** Any obligation imposed by this Agreement on each Person, except for the payment of money, shall be suspended while compliance therewith is prevented, in whole or in part, by a strike, fire, war, civil disturbance, act of God; by Federal, state or municipal laws; by any rule, regulation or order of a governmental agency; by inability to secure material or by any other cause beyond the reasonable control of such Person. No Person shall be required against its will to adjust or settle any labor dispute. Neither this Agreement nor any lease or other instrument subject thereto shall be terminated by reason of suspension of Unit Operations due to any of the causes set forth in this Article.

ARTICLE 15
NONDISCRIMINATION

15.1 **Nondiscrimination.** During the performance of work under this Agreement, Unit Operator agrees to comply with all of the provisions of

subsections (1) through (7) of Section 202, Executive Order 11246 of September 24, 1965, as amended by Executive Order 11375 of October 13, 1967, and as subsequently amended, which are hereby incorporated by reference in this Agreement.

ARTICLE 16
NOTICES

16.1 **Notices.** All notices required hereunder shall be in writing and shall be deemed to have been properly served when sent by mail or facsimile transmission to the address/fax number of the representative of each Working Interest Owner furnished to Unit Operator in accordance with Article 4.

16.2 **Notice of Transfer of Title.** A Working Interest Owner transferring, assigning or conveying all or any part of its interest in and to its Oil and Gas Rights shall notify Unit Operator of such transfer, assignment or conveyance within fifteen (15) days of the effective date of such transfer, assignment or conveyance. No change of title shall be binding upon the Unit or Unit Operator until the first day of the calendar month following the month of receipt by Unit Operator of evidence, satisfactory to Unit Operator, of such change of ownership. Each such transfer, assignment or conveyance, whether so stating or not, shall operate to impose upon the party or parties acquiring such interest the obligations of the predecessor in interest with respect to the interest so transferred and shall likewise operate to give and grant the party or parties acquiring such interest all benefits attributable hereunder to such interest.

ARTICLE 17
WITHDRAWAL OF WORKING INTEREST OWNER

17.1 **Withdrawal.** A Working Interest Owner may withdraw from this Agreement by transferring, without warranty of title either express or implied, to the Working Interest Owners who do not desire to withdraw, all of its Oil and Gas Rights, exclusive of Royalty Interests, together with its interest in all Unit Equipment and in all wells used in Unit Operations, provided that such transfer shall not relieve such Working Interest Owner from any obligation or liability incurred prior to the first day of the month following receipt by Unit Operator of such transfer, including, but not limited to any and all environmental liability or remedial obligations. The delivery of the transfer shall be made to Unit Operator for the transferees. The transferred interest shall be owned by the transferees in proportion to their respective Unit Working Interest. The transferees, in proportion to the respective interests so acquired, shall pay the transferor for its interest in Unit Equipment, less its share of the estimated cost of salvaging same, the estimated cost of plugging and abandoning all wells then being used or held for Unit Operations, estimated environmental liability, if any, and the estimated cost of all environmental remediation in the Unit Area, as determined by Working Interest Owners. In the event such withdrawing owner's interest in the aforesaid salvaged equipment is less than such owner's share of such estimated liability and costs, the withdrawing owner, as a condition precedent to withdrawal, shall pay the Unit Operator, for the benefit of Working Interest Owners succeeding to its interest, a sum equal to the deficiency. Within sixty (60) days after receiving delivery of the transfer, Unit Operator shall render a final statement to the withdrawing owner for its share of Unit Expense, including any deficiency in salvage value as determined by Working Interest Owners, incurred as of the first day of the month following the date of receipt of the transfer. Provided all Unit Expense, including any deficiency hereunder, due from the

withdrawing owner has been paid in full within thirty (30) days after rendering of such final statement by the Unit Operator as of such effective date, the withdrawing owner shall be relieved from all further obligations and liabilities hereunder and under the Unit Agreement, and the rights of the withdrawing Working Interest Owner hereunder and under the Unit Agreement shall cease insofar as they existed by virtue of the interest transferred.

17.2 **Limitation on Withdrawal.** Notwithstanding anything set forth in Article 17.1, Working Interest Owners may refuse to permit the withdrawal of a Working Interest Owner if its Working Interest is burdened by any royalties, overriding royalties, production payments, net proceeds interest, carried interest, or any other interest created out of the Working Interest in excess of twenty-one and 875/1000 percent (21.875%) royalty, unless the other Working Interest Owners are willing to accept the assignment and agree to accept the Working Interest subject to such burdens.

ARTICLE 18
ABANDONMENT OF WELLS

18.1 **Rights of Former Owners.** If Working Interest Owners determine to abandon any well within the Unit Area prior to termination of the Unit Agreement, Unit Operator shall give written notice thereof to the Working Interest Owners of the Tract on which the well is located, and they shall have the option for a period of sixty (60) days after the sending of such notice to notify Unit Operator in writing of their election to take over and own the well. Within ten (10) days after the Working Interest Owners of the Tract have notified Unit Operator of their election to take over the well, they shall pay Unit Operator, for credit to the Joint Account, the amount determined by the Working Interest Owners to be the net salvage value of the casing and equipment, through the wellhead, in and on the well. The Working Interest Owners of the Tract, by taking over the well, agree to seal off the Unitized Formation, and upon abandonment to plug the well and complete all environmental remediation relative to the well and the surface utilized in conjunction therewith in compliance with applicable laws and regulations. A failure to respond to notice within the sixty (60) day period set forth hereunder shall be deemed an election by the Working Interest Owners of said Tract not to take over the said well.

18.2 **Plugging.** If the Working Interest Owners of a Tract do not elect to take over a well located within the Unit Area that is proposed for abandonment, Unit Operator shall plug and abandon the well in compliance with applicable laws and regulations.

ARTICLE 19
EFFECTIVE DATE AND TERM

19.1 **Effective Date.** This Agreement shall become effective when the Unit Agreement becomes effective.

19.2 **Term.** This Agreement shall continue in effect so long as the Unit Agreement remains in effect, and thereafter until (a) all Unit wells have been plugged and abandoned or turned over to Working Interest Owners in accordance with Article 21; (b) all Unit Equipment and real property acquired for the Joint Account have been disposed of by Unit Operator in accordance with instructions of Working Interest Owners; and (c) all amounts owed to Unit Operator by any Person have been fully paid including accrued interest; and (d) there has been a final accounting.

ARTICLE 20
NON-CONSENTING WORKING INTEREST OWNERS

20.1 **Non-Consent.** Any Working Interest Owner who does not execute this Unit Operating Agreement prior to the Effective Date shall be deemed to have elected not to participate in Unit Operations. Each such Working Interest Owner (hereinafter referred to as "Non-Consenting Working Interest Owner"), shall be deemed to have relinquished to the Working Interest Owners who have executed this Unit Operating Agreement (hereinafter referred to as "Committed Working Interest Owners"), as of the Effective Date, and the Committed Working Interest Owners shall own and be entitled to receive, in proportions as hereinafter set forth, all of each such Non-Consenting Working Interest Owner's share of the Oil and Gas Rights in the Unit and share of production therefrom until the proceeds of sale of such share, calculated at the well (after deducting production taxes, excise taxes, royalty, overriding royalty and other interest payable out of or measured by the production from the Unit accruing with respect to such interest until it reverts) shall equal the total of the following:

a. **100%** of each Non-Consenting Working Interest Owner's share of the cost and expense of any acquired surface equipment beyond the wellhead connections (including but not limited to stock tanks, separators, treaters, pumping equipment, surface injection equipment and piping), plus **100%** of each such Non-Consenting Working Interest Owner's share of the cost of Unit Operations, together with interest thereon at the maximum rate permitted by the applicable usury laws of the State of Colorado, plus attorney's fees, court costs, and other costs in connection with the collection of the unpaid balance, if any, and;

b. **300%** of each such Non-Consenting Working Interest Owner's share of the costs and expenses of staking, wellsite preparation, drilling (production and/or injection wells), reworking, deepening, plugging back, testing, completing, converting existing wells to injection wells, and **300%** of that portion of the cost of newly acquired equipment in the well (to and including the wellhead connections), together with interest thereon at the maximum rate permitted by the applicable usury laws of the State of Colorado, plus attorney's fees, court costs and other costs in connection with the collection of the unpaid balance, if any.

Each month, the Unit Operator shall be reimbursed by the Committed Working Interest Owners for the share of Unit Expense chargeable to a Non-Consenting Working Interest Owner. Each Committed Working Interest Owner's share of the carried interest shall be treated as any other Unit Expense chargeable to such Committed Working Interest Owner and shall be in the ratio that such Committed Working Interest Owner's interest bears to the total interest of the Committed Working Interest Owners.

Recovery by the Committed Working Interest Owners of the monies advanced on behalf of a Non-Consenting Working Interest Owner, plus penalty as aforesaid, shall be recoverable from such Non-Consenting Working Interest Owner's share of production.

Any Working Interest Owner deemed non-consent under the provisions of Article 11.6 shall be deemed to have elected not to participate in Unit Operations from and after the date from which said Working Interest Owner has failed to pay its share of Unit Expense. Such Working Interest Owner

shall thereafter be subject to the penalties and interest charges as set forth above on all unpaid Unit Expense.

Notwithstanding the foregoing, Unit Operator shall have the option, but not the obligation, to elect to assume the interest of any Non-Consenting Working Interest Owners(s) in lieu of having all Committed Working Interest Owners participate. Unit Operator upon such election shall be entitled to recovery of the money advanced on behalf of any Non-Consenting Working Interest Owner(s), plus penalty and interest as provided herein.

ARTICLE 21
ABANDONMENT OF OPERATIONS

21.1 **Termination.** Upon termination of the Unit Agreement, the following will occur:

21.1.1 **Oil and Gas Rights.** Oil and Gas Rights in and to each separate Tract shall no longer be affected by this Agreement, and thereafter the parties shall be governed by the terms and provisions of the leases, contracts, and other instruments affecting the separate Tracts.

21.1.2 **Right to Operate.** Working Interest Owners of any Tract that desire to take over and continue to operate wells located thereon may do so by paying Unit Operator, for credit to the Joint Account, the net salvage value, as determined by Working Interest Owners, of the casing and equipment, through the wellhead, in and on the wells taken over and by agreeing upon abandonment to plug and abandon each well and to assess all environmental liability and complete all environmental remediation relative to the Tract in compliance with applicable laws and regulations.

21.1.3 **Salvaging Wells.** Unit Operator shall salvage as much of the casing and equipment in or on wells not taken over by Working Interest Owners of separate Tracts as can economically and reasonably be salvaged, and shall cause the wells to be plugged and abandoned and all environmental remediation to be completed in compliance with applicable laws and regulations.

21.1.4 **Cost of Abandonment.** Working Interest Owners shall share the cost of salvaging, liquidation or other distribution of assets and properties used in Unit Operations in the proportions to their respective Unit Working Interest, and the benefit of such salvage operations shall be credited to the Joint Account.

21.1.5 **Distribution of Assets.** Working Interest Owners shall share in the distribution of Unit Equipment, or the proceeds thereof, in proportion to their Unit Working Interest.

ARTICLE 22
APPROVAL

22.1 **Original, Counterpart, or Other Instrument.** An owner of a Working Interest may approve this Agreement by signing the original, a counterpart thereof, or a ratification agreeing to be bound by the terms hereof, or any other written instrument approving this Agreement. The signing of any such instrument shall have the same effect as if all Working Interest Owners had signed the same instrument.

ARTICLE 23
SUCCESSORS AND ASSIGNS

23.1 **Successors and Assigns.** This Agreement shall extend to, be binding upon, and inure to the benefit of the Persons hereto and their respective heirs, devisees, legal representatives, successors, and assigns, and shall constitute a covenant running with the lands, leases, and interests covered hereby.

ARTICLE 24
ASSIGNABILITY

24.1 **Limitation on Assignment.** Any Working Interest Owner is prohibited from assigning any of its interest hereunder unless said interest is a partial undivided interest herein or is that Working Interest Owner's entire undivided interest under this Agreement. If at any time subsequent to the Effective Date, the Working Interest of any Working Interest Owner is divided among and owned by two (2) or more co-owners, Unit Operator, at its discretion, may require such co-owners to appoint a single trustee or agent with full authority to receive notices, approve expenditures, receive billings for and approve and pay such party's share of Unit Expense, and to deal generally with, and with power to bind, the co-owners of such party's interest within the scope of the operations embraced in this Agreement; however, all such co-owners shall have the right to enter into and execute all contracts or agreements for the disposition of their respective shares of the Unitized Substances produced from the Unit Area.

ARTICLE 25
PRE-UNITIZATION EXPENSES

25.1 **Pre-Unitization Expenses.** Unit Operator anticipates incurring direct and indirect pre-unitization costs and expenses of no less than Seventy Thousand Dollars ($70,000.00). The aforedescribed costs and expenses shall be treated as a Unit Expense of each Working Interest Owner and shall be borne solely by each such Working Interest Owner as to such Working Interest Owner's Unit Working Interest.

ARTICLE 26
UNLEASED INTERESTS

26.1 **Treated as Leased.** If a Working Interest Owner owns in fee all or a part of the Oil and Gas Rights in any Tract within the Unit Area which are not subject to any oil and gas lease, or other contract in the nature thereof, such Working Interest Owner shall be deemed to own a Working Interest in such Tract to the extent of seven-eighths (7/8ths) of its interest therein and a Royalty Interest with respect to the remaining one-eighth (1/8th) interest therein.

ARTICLE 27
JOINDER IN DUAL CAPACITY

28.1 **Joinder in Dual Capacity.** In the event that the parties hereto own both Working Interest and Royalty Interests, it shall not be necessary for such party to execute this Agreement in both capacities in order to commit both classes of interests. Execution hereby by any such party in one capacity shall also constitute execution in the other capacity.

IN WITNESS WHEREOF, this Agreement is approved on the dates of execution by the Working Interest Owners and the Unit Operator.

"OPERATOR"

_____

By:_____

STATE OF COLORADO)
) ss
COUNTY OF _____)

The foregoing instrument was acknowledged before me this _____ day of _____, 2012, by **[NAME]** **[TITLE]** of [UNIT OPERATOR] on behalf of said entity.

_____
Notary Public

My commission expires:
_____

"NON-OPERATOR"

_____
[NAME]

STATE OF _____)
) ss
COUNTY OF _____)

The foregoing instrument was acknowledged before me this _____ day of _____, 2012, by _____.

_____
Notary Public

My commission expires:
_____

EXHIBIT "A", Part 1

Description of Tracts

Attached to and made a part of the Moose Field Unit Operating Agreement

Logan County, Colorado

TRACT NO.	DESCRIPTION
1	
2	

EXHIBIT "A", Part 2

Description of Leases

Attached to and made a part of the Moose Field Unit Operating Agreement

Logan County, Colorado

Note: All references to recording data refer to the records of Logan County, Colorado

Tract 1

Lease No.
Lease Date:
Recorded:
Lessor:
Lessee:
Legal Description:

Tract 2

Lease No.
Lease Date:
Recorded:
Lessor:
Lessee:
Legal Description:

EXHIBIT "A", PART 2

Ownership of Tracts

Attached to and made a part of the Moose Field Unit Operating Agreement

Logan County, Colorado

Note: "RI" denotes Royalty Interest, "OR" denotes Overriding Royalty Interest, "WI" denotes Working Interest and "NRI" denotes Net Revenue Interest herein

Tract 1 – [NAME]

[LAND DESCRIPTION] Logan Co., CO

Owner & Address	Int. Type	Tract WI	Tract NRI
TRACT TOTALS		100.0000000%	100.0000000%

Tract 2 – [NAME]

[LAND DESCRIPTION] Logan Co., CO

Owner & Address	Int. Type	Tract WI	Tract NRI
TRACT TOTALS		100.0000000%	100.0000000%

EXHIBIT "A", PART 3

Unit Tract Participation Factors

Attached to and made a part of the Moose Field Unit Agreement
Logan County, Colorado

Tract Number	Tract Part. Fact.
1	
2	
Total	**100.00000000%**

EXHIBIT "A", PART 4

Unit Interests

Attached to and made a part of the Moose Field Unit Agreement
Logan County, Colorado

WORKING INTERESTS

OWNER	INT TYPE	UNIT INTEREST
	WI	
	WI	
	WI	
	WI	
	WI	
TOTAL		100.0000000%

REVENUE INTERESTS

OWNER	INT TYPE	UNIT INTEREST
	OR	
	OR	
	OR	
	OR	
	OR	
	RI	
	WI	
	WI	
	WI	
	WI	
TOTALS		**100.0000000%**

EXHIBIT "B", PART 1

Unit Boundary and Tracts

Attached to and made a part of the Moose Field Unit Operating Agreement

Logan County, Colorado

EXHIBIT "B", PART 2

Well Renumbering

Attached to and made a part of the Moose Field Unit Operating Agreement

Logan County, Colorado

TRACT	CURRENT WELL NAME	NEW WELL NAME

EXHIBIT "C"

Attached to and made a part of that certain Operating Agreement dated _____, 2012, between _____ as Operator, and _____, as Non-Operator

ACCOUNTING PROCEDURE
JOINT OPERATIONS
I. GENERAL PROVISIONS

1. Definitions

"Joint Property" shall mean the real and personal property subject to the agreement to which this Accounting Procedure is attached.

"Joint Operations" shall mean all operations necessary or proper for the development, operation, protection and maintenance of the Joint Property.

"Joint Account" shall mean the account showing the charges paid and credits received in the conduct of the Joint Operations and which are to be shared by the Parties.

"Operator" shall mean the party designated to conduct the Joint Operations.

"Non-Operators" shall mean the Parties to this agreement other than the Operator.

"Parties" shall mean Operator and Non-Operators.

"First Level Supervisors" shall mean those employees whose primary function in Joint Operations is the direct supervision of other employees and/or contract labor directly employed on the Joint Property in a field operating capacity.

"Technical Employees" shall mean those employees having special and specific engineering, geological or other professional skills, and whose primary function in Joint Operations is the handling of specific operating conditions and problems for the benefit of the Joint Property.

"Personal Expenses" shall mean travel and other reasonable reimbursable expenses of Operator's employees.

"Material" shall mean personal property, equipment or supplies acquired or held for use on the Joint Property.

"Controllable Material" shall mean Material which at the time is so classified in the Material Classification Manual as most recently recommended by the Council or Petroleum Accountants Societies.

2. Statement and Billings

Operator shall bill Non-Operators on or before the last day of each month for their proportionate share of the Joint Account for the preceding month. Such bills will be accompanied by statements which identify the authority for expenditure, lease or facility, and all charges and credits summarized by appropriate classifications of investment and expense except that items of Controllable Material and unusual charges and credits shall be separately identified and fully described in detail.

3. Advances and Payments by Non-Operators

A. Unless otherwise provided for in the agreement, the Operator may require the Non-Operators to advance their share of estimated cash outlay for the succeeding month's operation within fifteen (15) days after receipt of the billing or by the first day of the month for which the advance is required, whichever is later. Operator shall adjust each monthly billing to reflect advances received from the Non-Operators.

B. Each Non-Operator shall pay its proportion of all bills within fifteen (15) days after receipt. If payment is not made within such time, the unpaid balance shall bear interest monthly at the prime rate in effect at _____

on the first day of the month in which delinquency occurs plus 1% or the

maximum contract rate permitted by the applicable usury laws in the state in which the Joint Property is located, plus attorney's fees, court costs, and other costs in connection with the collection of unpaid amounts.

4. Adjustments

Payment of any such bills shall not prejudice the right of any Non-Operator to protest or question the correctness thereof; provided, however, all bills and statements rendered to Non-Operators by Operator during any calendar year shall conclusively be presumed to be true and correct after twenty-four (24) months following the end of any such calendar year, unless within the said twenty-four (24) month period a Non-Operator takes written exception thereto and makes claim on Operator for adjustment. No adjustment favorable to Operator shall be made unless it is made within the same prescribed period. The provisions of this paragraph shall not prevent adjustments resulting from a physical inventory of Controllable Material as provided for in Section V.

COPYRIGHT © 1985 by the Council of Petroleum Accountants Societies.

5. **Audits**

A. A Non-Operator, upon notice in writing to Operator and all other Non-Operators, shall have the right to audit Operator's accounts and records relating to the Joint Account for any calendar year within the twenty-four (24) month period following the end of such calendar year; provided, however, the making of an audit shall not extend the time for the taking of written exception to and the adjustments of accounts as provided for in Paragraph 4 of this Section I. Where there are two or more Non-Operators, the Non-Operators shall make every reasonable effort to conduct a joint audit in a manner which will result in a minimum of inconvenience to the Operator. Operator shall bear no portion of the Non-Operators' audit cost incurred under this paragraph unless agreed to by the Operator. The audits shall not be conducted more than once each year without prior approval of Operator, except upon the resignation or removal of the Operator, and shall be made at the expense of those Non-Operators approving such audit.

B. The Operator shall reply in writing to an audit report within 180 days after receipt of such report.

6. **Approval By Non-Operators**

Where an approval or other agreement of the Parties or Non-Operators is expressly required under other sections of this Accounting Procedure and if the agreement to which this Accounting Procedure is attached contains no contrary provisions in regard thereto, Operator shall notify all Non-Operators of the Operator's proposal, and the agreement or approval of a majority in interest of the Non-Operators shall be controlling on all Non-Operators.

II. DIRECT CHARGES

Operator shall charge the Joint Account with the following items:

1. **Ecological and Environmental**

Costs incurred for the benefit of the Joint Property as a result of governmental or regulatory requirements to satisfy environmental considerations applicable to the Joint Operations. Such costs may include surveys of an ecological or archaeological nature and pollution control procedures as required by applicable laws and regulations.

2. **Rentals and Royalties**

Lease rentals and royalties paid by Operator for the Joint Operations.

3. **Labor**

A. (1) Salaries and wages of Operator's field employees directly employed on the Joint Property in the conduct of Joint Operations.

(2) Salaries of First level Supervisors in the field.

(3) Salaries and wages of Technical Employees directly employed on the Joint Property if such charges are excluded from the overhead rates.

(4) Salaries and wages of Technical Employees either temporarily or permanently assigned to and directly employed in the operation or the Joint Property if such charges are excluded from the overhead rates.

B. Operator's cost of holiday, vacation, sickness and disability benefits and other customary allowances paid to employees whose salaries and wages are chargeable to the Joint Account under Paragraph 3A of this Section II. Such costs under this Paragraph 3B may be charged on a "when and as paid basis" or by "percentage assessment" on the amount of salaries and wages chargeable to the Joint Account under Paragraph 3A of this Section II. If percentage assessment is used, the rate shall be based on the Operator's cost experience.

C. Expenditures or contributions made pursuant to assessments imposed by governmental authority which are applicable to Operator's costs chargeable to the Joint Account under Paragraphs 3A and 3B of this Section II.

D. Personal Expenses of those employees whose salaries and wages are chargeable to the Joint Account under Paragraphs 3A and 3B of this Section II.

4. **Employee Benefits**

Operator's current costs or established plans for employees' group life insurance, hospitalization, pension, retirement, stock purchase, thrift, bonus, and other benefit plans of a like nature, applicable to Operator's labor cost chargeable to the Joint Account under Paragraphs 3A and 3B of this Section II shall be Operator's actual cost not to exceed the percent most recently recommended by the Council of Petroleum Accountants Societies.

5. Material

Material purchased or furnished by Operator for use on the Joint Property as provided under Section IV. Only such Material shall be purchased for or transferred to the Joint Property as may be required for immediate use and is reasonably practical and consistent with efficient and economical operations. The accumulation of surplus stocks shall be avoided.

6. **Transportation**

Transportation of employees and Material necessary for the Joint Operations.

7. Services

The cost of contract services, equipment and utilities provided by outside sources, except services excluded by Paragraph 10 of Section II and Paragraph i, ii, and iii, of Section III. The cost of professional consultant services and contract services of technical personnel directly engaged on the Joint Property if such charges are excluded from the overhead rates. The cost of professional consultant services or contract services of technical personnel not directly engaged on the Joint Property shall be charged to the Joint Account as determined by Operator.

8. **Equipment and Facilities Furnished By Operator**

A. Operator shall charge the Joint Account for use of Operator owned equipment and facilities at rates commensurate with costs of ownership and operation as determined by Operator.. Such rates shall not **unreasonably** exceed commercial rates currently prevailing in the immediate area of the Joint Property.

B. For automotive equipment, Operator may elect to use rates published by the Petroleum Motor Transport Association.

9. **Damages and Losses to Joint Property**

All costs or expenses necessary for the repair or replacement of Joint Property made necessary because of damages or losses incurred by fire, flood, storm, theft, accident, or other cause, except those resulting from Operator's gross negligence or willful misconduct. Operator shall furnish Non-Operator written notice of damages or losses incurred as soon as practicable after a report thereof has been received by Operator.

10. **Legal Expense**

Expense of Regulatory proceedings, handling, investigating and settling litigation or claims, discharging of liens, payment of judgments and amounts paid for settlement of claims incurred in or resulting from operations under the agreement or necessary to protect or recover the Joint Property, except that no charge for services of Operator's legal staff shall be made unless previously agreed to by the Parties.

11. **Taxes**

All taxes of every kind and nature assessed or levied upon or in connection with the Joint Property, the operation thereof, or the production therefrom, and which taxes have been paid by the Operator for the benefit of the Parties. If the ad valorem taxes are based in whole or in part upon separate valuations of each party's working interest, then notwithstanding anything to the contrary herein, charges to the Joint Account shall be made and paid by the Parties hereto in accordance with the tax value generated by each party's working interest.

12. Insurance

Net premiums paid for insurance required to be carried for the Joint Operations for the protection of the Parties. In the event Joint Operations are conducted in a state in which Operator may act as self-insurer for Worker's Compensation and/or Employers Liability under the respective state's laws, Operator may, at its election, include the risk under its self-insurance program and in that event, Operator shall include a charge at Operator's cost not to exceed manual rates.

13. Abandonment and Reclamation

Costs incurred for abandonment of the Joint Property, including costs required by governmental or other regulatory authority.

14. Communications

Cost of acquiring, leasing, installing, operating, repairing and maintaining communication systems, including radio and microwave facilities directly serving the Joint Property. In the event communication facilities/systems serving the Joint Property are Operator owned, charges to the Joint Account shall be made as provided in Paragraph 8 of this Section II.

15. Other Expenditures

Any other expenditure not covered or dealt with in the foregoing provisions of this Section II, or in Section III and which is of direct benefit to the Joint Property and is incurred by the Operator in the necessary and proper conduct of the Joint Operations.

III. OVERHEAD

1. Overhead - Drilling and Producing Operations

i. As compensation for administrative, supervision, office services and warehousing costs, Operator shall charge drilling and producing operations on either:

(X) Fixed Rate Basis, Paragraph IA, or
( ) Percentage Basis, Paragraph IB

Unless otherwise agreed to by the Parties, such charge shall be in lieu of costs and expenses of all offices and salaries or wages plus applicable burdens and expenses of all personnel, except those directly chargeable under Paragraph 3A, Section II. The cost and expense of services from outside sources in connection with matters of taxation, traffic, accounting or matters before or involving governmental agencies shall not be considered as included in the overhead rates provided for in the above selected Paragraph of this Section III.

ii. The salaries, wages and Personal Expenses of Technical Employees and/or the cost of professional consultant services and contract services of technical personnel directly employed on the Joint Property:

( ) shall be covered by the overhead rates, or
(X) shall not be covered by the overhead rates.

iii. The salaries, wages and Personal Expenses of Technical Employees either temporarily or permanently assigned to and directly employed in the operation of the Joint Property:

(x) shall be covered by the overhead rates, or
( ) shall not be covered by the overhead rates.

A. Overhead - Fixed Rate Basis

(1) Operator shall charge the Joint Account at the following rates per well per month:

Drilling Well Rate $5,000

(Prorated for less than a full month)

Producing Well Rate $ $500

(2) Application of Overhead - Fixed Rate Basis shall be as follows:

(a) Drilling Well Rate

(1) Charges for drilling wells shall begin on the date the well is spudded and terminate on the date the drilling rig, completion rig, or other units used in completion of the well is released, whichever

is later, except that no charge shall be made during suspension of drilling or completion operations for fifteen (15) or more consecutive calendar days.

(2) Charges for wells undergoing any type of workover or recompletion for a period of five (5) consecutive work days or more shall be made at the drilling well rate. Such charges shall be applied for the period from date workover operations, with rig or other units used in workover, commence through date of rig or other unit release, except that no charge shall be made during suspension of operations for fifteen (15) or more consecutive calendar days.

(b) Producing Well Rates

(1) An active well either produced or injected into for any portion of the month shall be considered as a one-well charge for the entire month.

(2) Each active completion in a multi-completed well in which production is not commingled down hole shall be considered as a one-well charge providing each completion is considered a separate well by the governing regulatory authority.

(3) An inactive gas well shut in because of overproduction or failure of purchaser to take the production shall be considered as a one-well charge providing the gas well is directly connected to a permanent sales outlet.

(4) A one-well charge shall be made for the month in which plugging and abandonment operations are completed on any well. This one-well charge shall be made whether or not the well has produced except when drilling well rate applies.

(5) All other inactive wells (including but not limited to inactive wells covered by unit allowable, lease allowable, transferred allowable, etc.) shall not qualify for an overhead charge.

(3) The well rates shall be adjusted as of the first day of April each year following the effective date of the agreement to which this Accounting Procedure is attached. The adjustment shall be computed by multiplying the rate currently in use by the percentage increase or decrease recommended by COPAS The adjusted rates shall be the rates currently in use, plus or minus the computed adjustment.

2. Overhead - Major Construction

To compensate Operator for overhead costs incurred in the construction and installation of fixed assets, the expansion of fixed assets, and any other project clearly discernible as a fixed asset required for the development and operation of the Joint Property, Operator shall charge the Joint Account for overhead based on the following rates for any Major Construction Project in excess of $100,000.00:

A. 5% of the first $100,000 or total cost if less, plus
B. 3% of costs in excess of $100,000 but less than $1,000,000, plus
C. 2% of costs in excess of $1,000,000.

Total cost shall mean the gross cost of any one project. For the purpose of this paragraph, the component parts of a single project shall not be treated separately and the cost of drilling and workover wells and artificial lift equipment shall be excluded.

3. Catastrophe Overhead

To compensate Operator for overhead costs incurred in the event of expenditures resulting from a single occurrence due to oil spill, blowout, explosion, fire, storm, hurricane, or other catastrophes as agreed to by the Parties, which are necessary to restore the Joint Property to the equivalent condition that existed prior to the event causing the

expenditures, Operator shall charge the joint Account for overhead based on the following rates:

A. 5% of total costs through $100,000, plus

B. 3% of total costs in excess of $100,000 but less than $1,000,000, plus

C. 2% of total costs in excess of $1,000,000.

Expenditures subject to the overheads above will not be reduced by insurance recoveries and no other overhead provisions of this Section III shall apply.

4. Amendment of Rates

The overhead rates provided for in this Section III may be amended from time to time only by mutual agreement between the Parties hereto if, in practice, the rates are found to be insufficient or excessive.

IV. PRICING OF JOINT ACCOUNT MATERIAL PURCHASES, TRANSFERS AND DISPOSITIONS

Operator is responsible for Joint Account Material and shall make proper and timely charges and credits for all Material movements affecting the Joint Property. Operator shall provide all Material for use on the Joint Property; however, at Operator's option, such Material may be supplied by the Non-Operator. Operator shall make timely disposition of idle and/or surplus Material, such disposal being made either through sale to Operator or Non-Operator, division in kind, or sale to outsiders. Operator may purchase, but shall be under no obligation to purchase, interest of Non-Operators in surplus condition A or B Material.

1. Purchases

Material purchased shall be charged at the price paid by Operator after deduction of all discounts received. In case of Material found to be defective or returned to vendor for any other reasons, credit shall be passed to the Joint Account when adjustment has been received by the Operator.

2. Transfers and Dispositions

Material furnished to the Joint Property and Material transferred from the Joint Property or disposed of by the Operator, unless otherwise agreed to by the Parties, shall be priced on the following basis exclusive of cash discounts:

A. New Material (Condition A) – All new material shall be priced at the current new price, in effect on the date of movement, as listed by a reliable supply store near the Joint Property, or point of manufacture, plus transportation costs.

B. Good Used Material (Condition B)

Material in sound and serviceable condition and suitable for reuse without reconditioning shall be priced at current market price as determined by Operator.:

The cost of reconditioning, if any, shall be absorbed by the transferring property.

C. Other Used Material

(1) Condition C

Material which is not in sound and serviceable condition and not suitable for its original function until after reconditioning shall be priced at current market price as determined by Operator.

(2) Condition D

Material, excluding junk, no longer suitable for its original purpose, but usable for some other purpose shall be priced on a basis commensurate with its use. Operator may dispose of Condition D Material under procedures normally used by Operator without prior approval of Non-Operators.

(3) Condition E

Junk shall be priced at prevailing prices. Operator may dispose of Condition E Material under procedures normally utilized by Operator without prior approval of Non-Operators.

D. Obsolete Material

Material which is serviceable and usable for its original function but condition and/or value of such Material is not equivalent to that which would justify a price as provided above may be specially priced as determined by Operator.

3. Premium Prices

Whenever Material is not readily obtainable at published or listed prices because of national emergencies. strikes or other unusual causes over which the Operator has no control, the Operator may charge the Joint Account for the required Material at the Operator's actual cost incurred in providing such Material, in making it suitable for use, and in moving it to the Joint Property; provided notice in writing is furnished to Non-Operators of the proposed charge prior to billing Non-Operators for such Material. Each Non-Operator shall have the right, by so electing and notifying Operator within ten days after receiving notice from Operator, to furnish in kind all or part of his share of such Material suitable for use and acceptable to Operator.

4. Warranty of Material Furnished By Operator

Operator does not warrant the Material furnished. In case of defective Material, credit shall not be passed to the Joint Account until adjustment has been received by Operator from the manufacturers or their agents.

EXHIBIT "D"

Insurance Provisions

Attached to and made a part of the Moose Field Unit Operating Agreement
Logan County, Colorado

Operator agrees at all times while operations are conducted hereunder to carry insurance with minimum limits of liability as noted below, provided, however, Operator at its sole option may carry higher limits of insurance:

(a) Workmen's Compensation with liability limits in accordance with the laws of the state applicable; and Employer's Liability Insurance with liability limits of One Hundred Thousand Dollars ($100,000.00) or the minimum required by the laws of the state applicable, and

(b) General Liability Insurance with limits of One Hundred Thousand Dollars ($100,000.00) as to any one person, and Three Hundred Thousand Dollars ($300,000.00) as to any one occurrence for bodily injury liability and with a limit of One Hundred Thousand Dollars ($100,000.00) for property damage liability, and

(c) Automobile liability insurance to cover all automotive equipment with limits of One Hundred Thousand Dollars ($100,000.00) as to any one person and Three Hundred Thousand Dollars ($300,000.00) as to any one occurrence for bodily injury liability and with a limit of One Hundred Thousand Dollars ($100,000.00) for property damage liability.

(d) An Umbrella Insurance policy providing additional limits of One Million Dollars ($1,000,000.00) for all of the insurance coverage as it may be applicable to sub-paragraphs (a), (b), and (c).

Operator may carry, but is not obligated to do so, a reasonable amount of insurance, determined in Operator's sole discretion, on the physical equipment or lease property above ground against loss from fire, lightning, and windstorm, or for other losses which may be incurred.

The premiums paid or costs incurred for all actual insurance coverage carried by Operator applicable to the leases covered hereby, whether or not coverage is in excess of the minimum amounts, and whether or not all of such insurance is listed herein, shall be a proper charge to the joint account.

Operator is not a warrantor of the financial responsibility of the insurer with whom any insurance is carried, and Operator shall not be liable to Non-Operator for any loss suffered on account of the insufficiency of the financial worthiness of any insurance carrier or for any loss suffered on account of the insufficiency of any amount of insurance finally obtained.

Operator shall not be liable to Non-Operator for any loss incurred by reason of Operator's inability to procure or maintain insurance. Operator agrees that, if at any time during the life of this Agreement it is unable to obtain or maintain insurance, Operator shall make its best effort to so notify Non-Operator for any loss, damage, or expense incurred whether covered by insurance or not.

Operator may elect, if allowed by the state in which operations are conducted, to act as a self-insurer for any of the insurance listed in (a), (b), (c) and (d) above under the respective state's laws. If Operator so elects, Operator shall make its best effort to give Non-Operator written notice thereof, but shall incur no liability for failure to do so. Unless otherwise mutually agreed, there shall be no charge to the joint account for costs of Operator's self-insurance, and Operator shall have no liability to Non-Operator for any loss, damage, or expense, including, but not limited to, liability for claims growing out of personal injury to or death of third persons or injury or destruction of property of third parties, resulting from the operation and development of the leases covered hereby which may be covered by Operator's self-insurance. Each party individually may acquire such insurance as it deems proper to the benefit of such party procuring same.

Exhibit J Resistivity Log: Resistivity Log of the State of Colorado 2-10, Colorado API 07509279, showing top of surface casing, shallow intervals, and the top of the D Sand Formation (IN GREEN HIGHLIGHT), the Propositioned Injection Horizon.

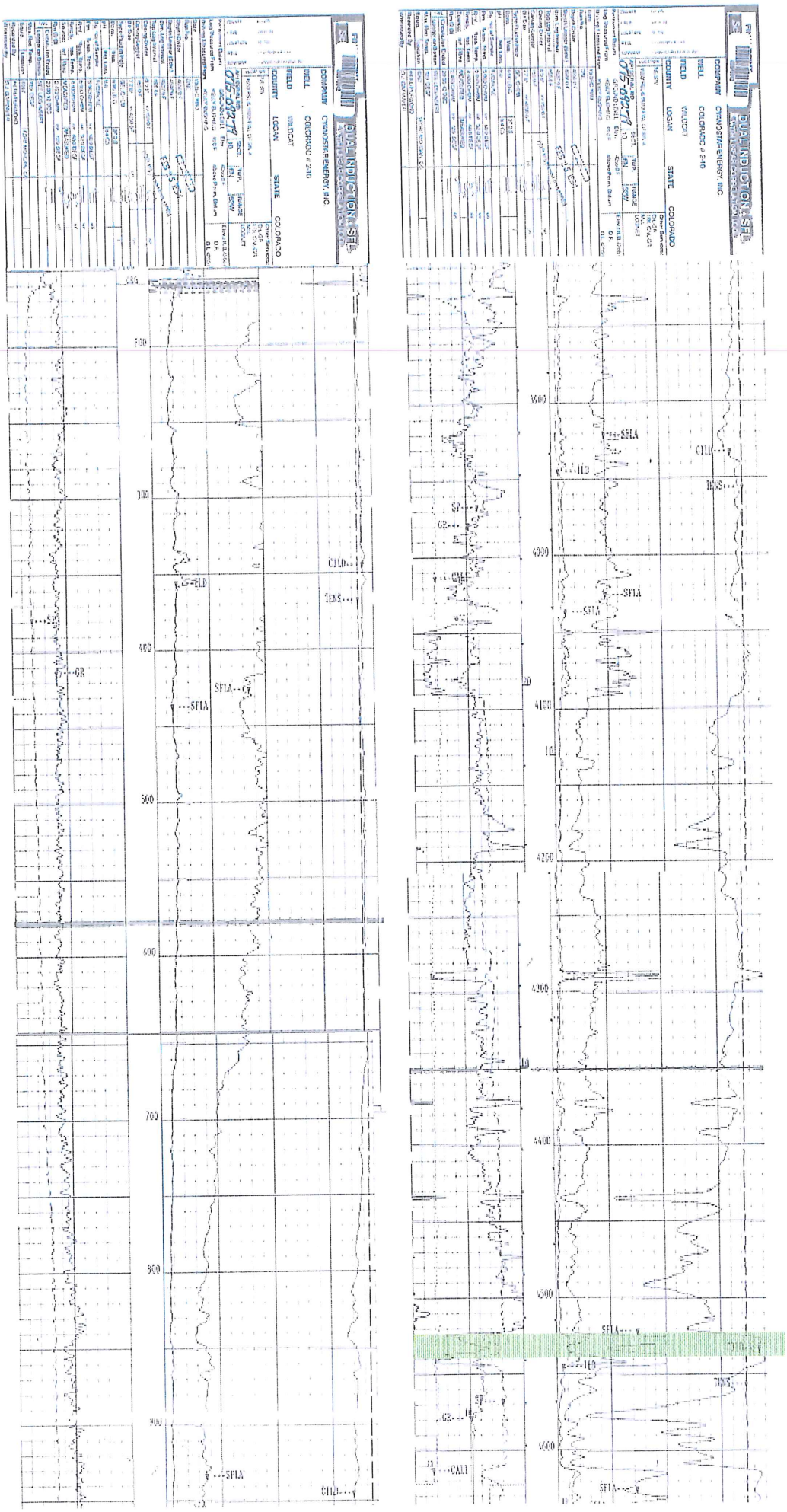

EXHIBIT K

BEFORE THE OIL AND GAS CONSERVATION COMMISSION

OF THE STATE OF COLORADO

IN THE MATTER OF THE APPLICATION OF INVESTMENT EQUIPMENT, LLC FOR AN ORDER ESTABLISHING AN ENHANCED RECOVERY UNIT, AUTHORIZING ASSOCIATED ENHANCED RECOVERY OPERATIONS, AND REQUESTING AN AQUIFER EXEMPTION IN AND TO THE D SAND FORMATION OF CERTAIN DESCRIBED LANDS IN LOGAN COUNTY, COLORADO	CAUSE NO. DOCKET NO.

AFFIDAVIT OF MAILING

STATE OF COLORADO)
)ss.
CITY AND COUNTY OF DENVER)

Jamie L. Jost of lawful age, and being first duly sworn upon her oath, states and declares:

That she is the attorney for Investment Equipment LLC, that on or before May 18, 2012, she caused a copy of the attached Application to be deposited in the United States Mail, postage prepaid, addressed to the parties listed on EXHIBIT 1 to the Application.

Jamie L. Jost

Subscribed and sworn to before me on May 11, 2012.

Witness my hand and official seal.

My commission expires: 10-04-13.

TERESA L. PETERSON NOTARY PUBLIC STATE OF COLORADO

Notary Public